CITY OF LUFKIN

DRAINAGE CRITERIA MANUAL

CITY OF LUFKIN
Engineering Department

Subdivision Ordinance
Amendment No. 3263

Prepared By:
Dodson & Associates, Inc.
Everett Griffith, Jr., & Associates, Inc.

DATE: AUGUST 5, 1997
REVISED: JUNE 16, 1998

DRAINAGE CRITERIA MANUAL

FOR THE

CITY OF LUFKIN, TEXAS

Prepared By

Dodson & Associates, Inc.

August 5, 1997

Revised June 16, 1998

GENERAL GUIDE FOR DRAINAGE MANUAL DEVELOPMENT

- **Purpose of the Drainage Criteria and Manual**

  Describe the overall objectives of the criteria manual. (Section 1)

- **City of Lufkin Regulatory Structure**

  In this section, introduce the departments at the City of Lufkin that will be involved in regulating drainage. Refer to applicable city drainage ordinances and Texas water law. (Section 2)

- **Activities Requiring Submittals**

  List and describe the types of activities for which a submittal to the city will be required. (Section 3)

- **Requirements for Various Submittals**

  Describe the information, computations, etc. required for various submittals. This can be a checklist or discussion type format. (Sections 4 & 5)

- **Methods to be Used for Preparing Submittals**

  In these sections, describe the methodologies and data to be used in preparing submittals. (Sections 5 - 11)

TABLE OF CONTENTS

1. PURPOSE AND POLICIES **1**

1.1 GENERAL DRAINAGE OBJECTIVES 1
1.2 KEY DRAINAGE CONCEPTS AND POLICIES 1
1.2.1 Level of Protection *1*
1.2.2 Zero Impact *1*
1.2.3 Storm Water Detention *2*
1.2.4 Flood Plain Storage *2*
1.2.5 Primary and Secondary Drainage Facilities *2*
1.3 THE NATIONAL FLOOD INSURANCE PROGRAM 2
1.4 PURPOSE OF THE DRAINAGE CRITERIA MANUAL 3

2. CITY OF LUFKIN REGULATORY STRUCTURE **4**

2.1 CITY REGULATORY AGENCIES & RESPONSIBILITIES 4
2.2 DRAINAGE CRITERIA MANUAL DEVELOPMENT AND AUTHORITY 4
2.3 CITY ORDINANCES RELATED TO STORM WATER DRAINAGE 4
2.4 THE TEXAS WATER CODE 5

3. REVIEW AND APPROVAL OF DRAINAGE PLANS **6**

3.1 TYPES OF SUBMITTALS 6
3.2 ACTIVITIES FOR WHICH SUBMITTALS TO THE CITY ARE REQUIRED 6
3.3 GENERAL REQUIREMENTS FOR VARIOUS SUBMITTALS 7
3.4 BRIEF DESCRIPTION OF THE REVIEW AND APPROVAL PROCESS 9

4. GENERAL REQUIREMENTS FOR NEW DEVELOPMENT **10**

4.1 BASIC DRAINAGE POLICIES 10
4.2 SUMMARY OF REQUIREMENTS FOR INDIVIDUAL DRAINAGE FACILITIES 10
4.3 HYDROLOGIC ANALYSIS 12
4.4 HYDRAULIC ANALYSIS OF OPEN CHANNELS AND ENCLOSED SYSTEMS 12
4.5 LOT GRADING AND DRAINAGE 12
4.6 STREETS AND STORM SEWERS 12
4.7 ROADSIDE DITCHES AND CULVERTS IN THOSE DITCHES 13
4.8 OPEN CHANNELS, CULVERTS, AND BRIDGES 14
4.9 STORM WATER DETENTION 14
4.10 RIGHT-OF-WAY 15
4.11 IMPACT IDENTIFICATION AND MITIGATION 15
4.12 EROSION CONTROL 16
4.13 MAINTENANCE 16

5. GENERAL REQUIREMENTS FOR VARIOUS SUBMITTALS **17**

5.1 NEW DEVELOPMENT 17
5.2 WATERSHED HYDROLOGIC STUDIES 17
5.3 HYDRAULIC STUDIES INVOLVING PRIMARY DRAINAGE COMPONENTS 18
5.4 DETENTION DESIGN 18
5.5 DESIGN OF SECONDARY DRAINAGE FACILITIES 19

6. HYDROLOGIC & HYDRAULIC CONCEPTS **21**

6.1 INTRODUCTION 21
6.2 DEFINITIONS OF BASIC TECHNICAL TERMS 21
6.3 BASIC HYDROLOGIC CONCEPTS 22
6.3.1 The Hydrologic Cycle *22*
6.3.2 Design Rainfall Events *22*
6.3.3 Infiltration & Runoff *23*
6.3.4 Runoff Hydrographs *23*

TABLE OF CONTENTS

6.4 BASIC HYDRAULIC CONCEPTS 23
6.4.1 Conveyance *23*
6.4.2 The Manning Formula *23*
6.5 EFFECTS OF URBANIZATION 24
6.6 FLOOD INSURANCE CONCEPTS 24

7. HYDROLOGIC ANALYSES 26

7.1 COMPUTING PEAK FLOW RATES FOR DRAINAGE AREAS UP TO 250 ACRES 26
7.1.1 Introduction *26*
7.1.2 The Rational Method *26*
7.1.3 Establishing the Drainage Area *26*
7.1.4 Determining Runoff Coefficients *26*
7.1.5 Establishing the Time of Concentration *28*
7.1.6 Computation of the Rainfall Intensity *28*
7.1.7 Computing Peak Flow Rates *29*
7.1.8 Analyzing a Watershed with Multiple Sub-Areas or Computation Points *29*
7.2 HYDROLOGIC ANALYSES FOR DRAINAGE AREAS OF 250 ACRES AND MORE 29
7.2.1 Watershed and Sub-Watershed Boundaries *29*
7.2.2 Rainfall Data *30*
7.2.3 Infiltration Losses *30*
7.2.4 Unit Hydrograph Methodology *32*
7.2.5 Computation of Runoff Hydrographs *33*
7.2.6 Streamflow Routing *34*
7.2.7 Combining Hydrographs *34*
7.2.8 Analyses of Watersheds With Multiple Sub-Areas *35*

8. DESIGN OF DETENTION FACILITIES 36

8.1 GENERAL DESIGN REQUIREMENTS 36
8.1.1 Design Storm Frequencies *36*
8.1.2 Detention Basin Location and Geometry *36*
8.1.3 Right-of-Way *37*
8.1.4 Maintenance *37*
8.1.5 Pump Facilities *37*
8.1.6 Multi-Purpose Design *37*
8.2 PEAK INFLOW RATE AND INFLOW HYDROGRAPH 37
8.3 INFLOW VOLUME 38
8.4 ALLOWABLE PEAK DISCHARGE RATE 38
8.5 DETERMINING THE DETENTION STORAGE VOLUME REQUIREMENT 38
8.6 DESIGN OF DETENTION OUTLET STRUCTURES 39
8.7 DETENTION ROUTING ANALYSIS 39
8.8 EXTREME CONDITIONS OVERFLOW STRUCTURES 39

9. ANALYSIS AND DESIGN OF PRIMARY DRAINAGE FACILITIES 40

9.1 HYDRAULIC ANALYSES OF OPEN CHANNELS AND STRUCTURES 40
9.1.1 General Requirements for Hydraulic Analyses *40*
9.1.2 Storm Frequencies *40*
9.1.3 Peak Flow Rates *40*
9.1.4 Acceptable Methodologies *40*
9.1.5 Data Requirements *41*
9.1.6 Roughness Coefficients *41*
9.1.7 Bridge & Culvert Modeling *45*
9.1.8 Floodway Delineation *47*
9.2 DESIGN OF OPEN CHANNELS 48
9.2.1 Design Storm Frequency and Conditions *48*

TABLE OF CONTENTS

9.2.2 Minimum Design Requirements for Grass-Lined Earthen Channels *48*
9.2.3 Minimum Design Requirements for Trapezoidal Concrete-Lined Channels *49*
9.2.4 Minimum Design Requirements for Rectangular Concrete Low-Flow Sections *50*
9.2.5 Acceptable Design Methodologies *50*
9.2.6 Design Flow Rates *51*
9.2.7 Maximum Flow Velocities *51*
9.2.8 Transitions and Bends *51*
9.2.9 Right-of-Way Dedication *52*
9.2.10 Maintenance *52*
9.3 DESIGN OF BRIDGES AND CULVERTS 52
9.3.1 General Design Requirements *52*
9.3.2 Acceptable Design Methodologies *53*
9.3.3 Design Flow Rates *53*
9.3.4 Maximum Flow Velocities *53*
9.3.5 Slope Protection *53*
9.3.6 Structural Requirements *54*
9.4 DESIGN OF ENCLOSED DRAINAGE SYSTEMS 54
9.4.1 Systems Included in this Category *54*
9.4.2 General Design Requirements *54*
9.4.3 Acceptable Design Methods *55*
9.4.4 Friction Losses *55*
9.4.5 Minor Losses *55*

10. DESIGN OF SECONDARY DRAINAGE FACILITIES 58

10.1 FACILITIES INCLUDED IN THIS CATEGORY 58
10.2 DESIGN OF STORM SEWER FACILITIES 58
10.2.1 General Design Requirements *58*
10.2.2 Peak Flow Rates *59*
10.2.3 Acceptable Methods for Hydraulic Analysis *59*
10.2.4 Friction Losses *59*
10.2.5 Minor Losses *60*
10.2.6 Extreme Event Design *62*
10.3 DESIGN OF ROADSIDE DITCHES 62
10.4 DESIGN OF OTHER SECONDARY DRAINAGE FACILITIES 63
10.4.1 Facilities Included *63*
10.4.2 General Design Requirements *64*
10.4.3 Design Methods *64*
10.4.4 Peak Flow Rates *64*

11. EROSION AND SEDIMENT CONTROL 65

11.1 INTRODUCTION 65
11.2 EFFECTS OF EROSION AND SEDIMENTATION 65
11.3 AREAS WITH HIGH EROSION POTENTIAL 65
11.4 SLOPE PROTECTION METHODS 65
11.4.1 Turf Establishment *66*
11.4.2 Slope Paving *66*
11.4.3 Rip-Rap *67*
11.4.4 Acceptable Velocities for Various Slope Treatments *67*
11.5 REQUIREMENTS FOR CHANNEL BENDS AND CONFLUENCES 67
11.6 REQUIREMENTS FOR STORM SEWER OUTFALLS 68
11.7 CHANNEL BACKSLOPE DRAIN SYSTEMS 68
11.8 INTERCEPTOR STRUCTURES FOR SECONDARY DRAINAGE 69
11.9 STORM WATER POLLUTION PREVENTION PLANS 69
11.10 SPECIAL ENERGY DISSIPATION STRUCTURES 69

LIST OF EXHIBITS

SECTION 1: PURPOSE AND POLICIES

1. Lufkin Watersheds

SECTION 2: CITY OF LUFKIN REGULATORY STRUCTURE

1. City of Lufkin Permit Approval Process

SECTION 3: REVIEW AND APPROVAL OF DRAINAGE PLANS

SECTION 4: GENERAL REQUIREMENTS FOR NEW DEVELOPMENT

1. Requirements for Lot Drainage Design (Plan View)
2. Requirements for Lot Drainage Design (Cross-Section View)
3. Undesirable Sheet Flow Patterns
4. Acceptable Sheet Flow Patterns
5. Typical Yard Grading Layout 'Grade A'
6. Typical Yard Grading Layout 'Grade B'
7. Commercial Lot Grading

SECTION 5: GENERAL REQUIREMENTS FOR VARIOUS SUBMITTALS

SECTION 6: HYDROLOGIC & HYDRAULIC CONCEPTS

1. The Hydrologic Cycle
2. Unit and Runoff Hydrographs
3. Concepts Associated With Manning's Equation
4. Relationship Between the 100-Year Flood Plain and Floodway
5. Explanation of Information Illustrated on Flood Insurance Rate Maps

SECTION 7: HYDROLOGIC ANALYSES

1. SCS Uplands Method Graph of Slope Versus Flow Velocity
2. Rainfall Intensity for Given Storm Recurrence Interval and Duration
3. Rainfall Hyetograph for 100-Year, 24-Hour Storm Event
4. Cedar Creek Watershed Map
5. HEC-1 Modeling Schematic, Cedar Creek Watershed
6. HEC-1 Hydrograph Stack Operations

LIST OF EXHIBITS

SECTION 8: DESIGN OF DETENTION FACILITIES

1. Typical Detention Basin Configuration
2. Cross-Section of Typical Detention Basin
3. Estimating Detention Volume Requirements for Basins With Watersheds <= 100 Acres
4. Estimating Detention Volume Requirements for Basins With Watersheds > 100 Acres

SECTION 9: DESIGN AND ANALYSIS OF PRIMARY DRAINAGE FACILITIES

1. Floodway Map
2. Typical Cross-Section, Grass-Lined Trapezoidal Channel
3. Typical Cross-Section, Concrete-Lined Trapezoidal Channel
4. Typical Cross-Section, Concrete-Lined Channel with Rectangular Low Flow Section
5. Graph of Peak Flow Rate vs. Stream Station

SECTION 10: DESIGN OF SECONDARY DRAINAGE FACILITIES

1. Typical Storm Sewer Outfall Structure (24-Inch to 42-Inch)
2. Typical Storm Sewer Outfall Structure (48-Inch and Larger)
3. Storm Sewer - Channel Interaction
4. Undesirable Sheet Flow Patterns
5. Acceptable Sheet Flow Patterns

SECTION 11: EROSION CONTROL

1. Slope Protection Requirements at Stream Confluence's
2. Slope Protection Requirements at Channel Bends
3. Typical Storm Sewer Outfall Structure (24-Inch to 42-Inch)
4. Typical Storm Sewer Outfall Structure (48-Inch and Larger)
5. Typical Roadside Ditch Interceptor Structure
6. Typical Backslope Interceptor Structure
7. Typical Rock Berm Installation
8. Typical Filter Fabric Fence Installation

1. PURPOSE AND POLICIES

1.1 GENERAL DRAINAGE OBJECTIVES

The City of Lufkin covers portions of a number of watersheds, including Cedar Creek, Jack Creek, Hurricane Creek, Mill Creek, Paper Mill Creek, Biloxi Creek, and One Eye Creek. The boundaries of the City of Lufkin and these watersheds are illustrated on Exhibit 1-1.

General drainage objectives for the City of Lufkin include the following:

- **Preserve Public Safety:** Minimize the potential for injury and loss of life due to flooding.
- **Maintain Continuity of Critical Services:** Minimize the disruption of critical services, including power supply, water supply, wastewater treatment, and medical care, due to flooding.
- **Prevent Property Damage:** Implement a program of drainage improvements and policies aimed at reducing the level of property damages due to flooding.
- **Reduce Public Apprehension:** Reduce public apprehension with respect to potential problems associated with flooding.
- **Encourage Future Development:** Provide for the orderly development of watersheds located wholly or partially within the incorporated boundaries of the city without increasing the potential for flooding damages.
- **Provide Open Space:** Provide for the public need for open space, recreational areas, and contact with the natural environment.
- **Preserve the Natural Environment:** Preserve and enhance the natural environment whenever and wherever feasible.

1.2 KEY DRAINAGE CONCEPTS AND POLICIES

1.2.1 Level of Protection

The *level of protection* is generally regarded as the storm recurrence interval which primary drainage facilities, such as open channels, roadway culverts, and detention facilities, are designed to accommodate without significant flooding damages. For example, providing a *100-year level of protection* would indicate that primary drainage facilities are designed to carry storm runoff from a 100-year storm event without significant flooding of homes and other buildings. For the analysis and design of primary drainage facilities, the City of Lufkin has adopted a 100-year level of protection.

1.2.2 Zero Impact

An *impact* is defined as a change in the response of a watershed to a storm event. The most common impacts are changes in the volume of runoff, changes in the rate of runoff, and changes in flooding depths. Impacts may be adverse or beneficial. *Adverse impacts* are those which

increase the potential for flooding damages. *Beneficial impacts*, on the other hand, reduce the potential for flood damage. The term *zero impact* is normally defined as the absence of adverse impacts. The City of Lufkin maintains a strict zero impact policy in all watersheds located wholly or partially within the incorporated boundaries of the city. This means that neither increases in upstream flood levels nor in downstream flow rates are allowed in areas where there is the potential for flooding damages from storms with recurrence intervals of 100 years or less.

1.2.3 Storm Water Detention

Storm water detention refers to the temporary storage of storm runoff in ponds or other storage facilities. The provision of this temporary storage allows storm runoff to be discharged to a receiving stream at a lower rate, thereby protecting downstream areas from increased flooding damages associated with increased flow rates and higher flood levels. The City of Lufkin recognizes the value of storm water detention in reducing the potential for flood damages and encourages the use of detention facilities in mitigating impacts associated with new development and drainage improvements.

1.2.4 Flood Plain Storage

Flood plain storage is defined for the purposes of this manual as the air space below 100-year flood levels. This air space is available for the temporary storage of flood waters during extreme storm events. Preservation of this air space is extremely important because flood plain storage serves to reduce downstream peak flow rates. The City of Lufkin prohibits reductions in existing flood plain storage along all streams which pass through the incorporated areas of the city.

1.2.5 Primary and Secondary Drainage Facilities

For the purposes of this manual, *primary drainage facilities* include open channels, bridges, culverts, detention facilities, and enclosed drainage systems. *Secondary drainage facilities* include storm sewer systems, roadside ditches and associated structures, sheet flow swales, and other facilities which typically serve relatively small drainage areas.

1.3 THE NATIONAL FLOOD INSURANCE PROGRAM

The City of Lufkin is a participant in the National Flood Insurance Program. This program provides federally subsidized flood insurance to those cities and counties which elect to participate. The program is administered by the Federal Emergency Management Agency (FEMA), which is headquartered in Washington, D.C. Flood insurance data for participating cities and counties is published by FEMA in two formats: bound *flood insurance studies*, which describe the results of flooding studies completed for significant streams, and Flood Insurance Rate Maps, which provide data on 100-year flood levels, illustrate the boundaries of the floodway, 100-year flood plain, and 500-year flood plain, and designate flood hazard zones for insurance purposes.

SECTION 1: PURPOSE AND POLICIES

1.4 PURPOSE OF THE DRAINAGE CRITERIA MANUAL

The primary purpose of this drainage criteria manual is to establish standard principles and practices for the analysis, design, and construction of primary and secondary drainage systems in the City of Lufkin, Texas.

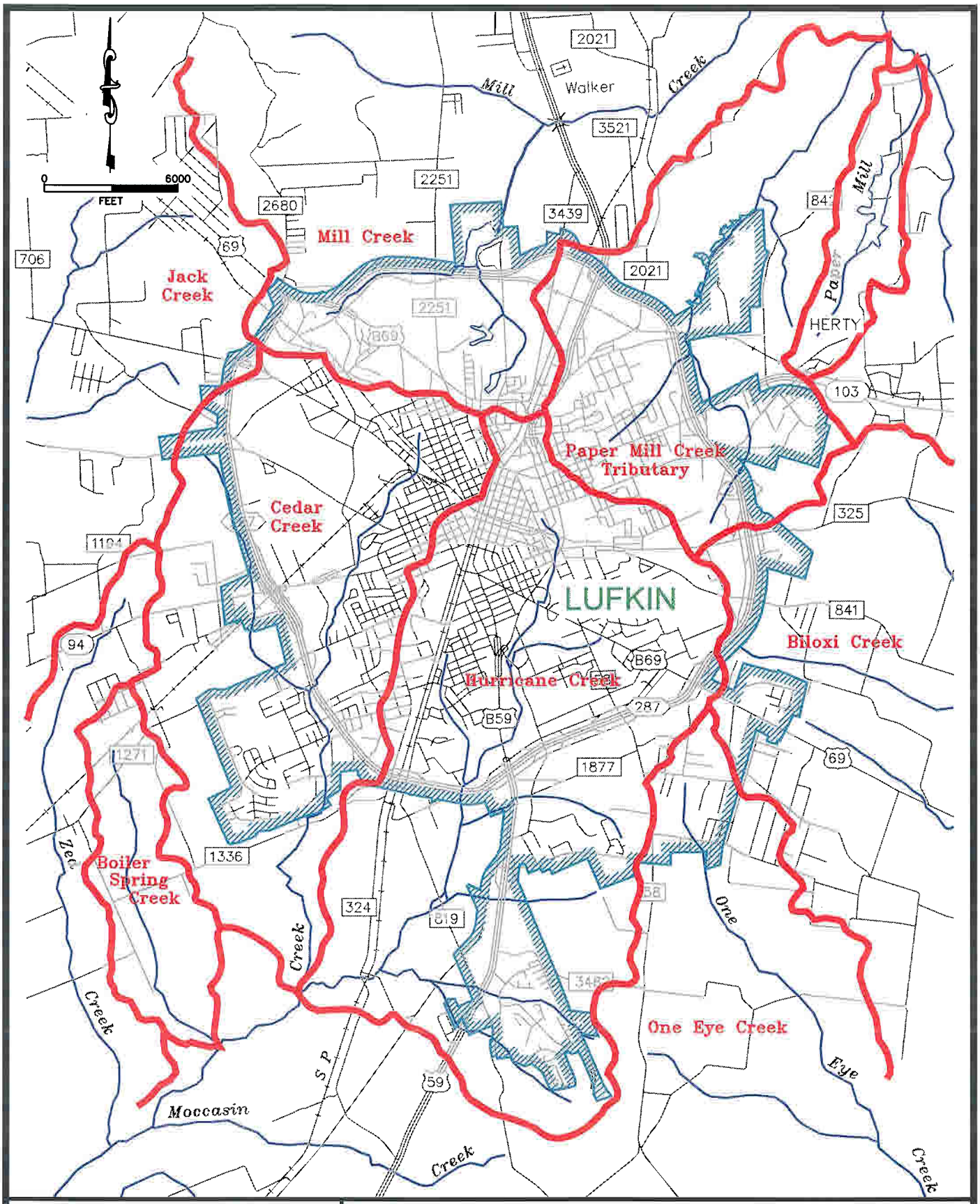

CITY OF LUFKIN
LUFKIN, TEXAS

DESIGN CRITERIA MANUAL

LUFKIN WATERSHEDS

DATE	MARCH 1997	EXHIBIT NO.	1-1

2. CITY OF LUFKIN REGULATORY STRUCTURE

2.1 CITY REGULATORY AGENCIES & RESPONSIBILITIES

The City of Lufkin Engineering Department has the responsibility for reviewing and approving drainage plans and verifying flood plains and drainage easements for projects in the City of Lufkin. The City Planning and Zoning Department is responsible for enforcing the City's zoning ordinance and verifying building setbacks. The Fire Marshal verifies that fire safety requirements are met regarding commercial businesses in accordance with the SBCCI 1994 Fire Prevention Code. The Building Inspector has final approval authority over all new building construction. Telephone numbers for the various departments are presented in Table 2-1.

TABLE 2-1: TELEPHONE NUMBERS FOR VARIOUS CITY DEPAREMENTS

Department	***Telephone Number***
Building Inspection	(409)633-0248
Engineering	(409)633-0414 Fax: (409)633-0416
Planning & Zoning	(409)633-0247
Fire Marshal	(409)633-0307

All building permit applications are submitted to the Building Inspection Department of the City of Lufkin. Permit applications are reviewed by the Engineering Department, Planning and Zoning Department, the Planning & Zoning Commission (only for site plans of more than 3 acres), the Fire Marshal (commercial development only), and the Building Inspector. Plat approvals shall be submitted to the Engineering Department with a letter from the Developer or Engineer and the appropriate fee payment. The plats are reviewed by the Engineering Department, Planning and Zoning Department, and the Planning and Zoning Commission (for plats with 4 or more lots). Zone changes will require the approval of the Planning and Zoning Commission. Exhibit 2-1 illustrates the basic permit approval process for the City of Lufkin.

2.2 DRAINAGE CRITERIA MANUAL DEVELOPMENT AND AUTHORITY

The development of this drainage criteria manual was authorized by the City of Lufkin, Texas. The manual is intended to serve as a statement of policy and criteria for all incorporated areas of the city and its extraterritorial jurisdiction (ETJ). Any project falling within the jurisdiction of the City of Lufkin should be designed and constructed in accordance with the criteria presented in this manual.

2.3 CITY ORDINANCES RELATED TO STORM WATER DRAINAGE

Ordinances adopted by the City of Lufkin relating to storm water drainage include the following:

- City of Lufkin Code of Ordinances, Title 15: Land Usage, Chapter 151: Flood Damage Reduction;

- City of Lufkin Ordinance No. 1170: Subdivision Ordinance.
- City of Lufkin Ordinance No. 3263: Amendment to Subdivision Ordinance.

Other important documents include Appendix One to the *City of Lufkin Master Plan* and Appendix D to the *City of Lufkin Comprehensive Plan*.

2.4 THE TEXAS WATER CODE

A number of provisions made in the Texas Water Code are applicable to drainage projects falling within the jurisdiction of the City of Lufkin. These provisions deal largely with the treatment of storm water runoff in ways which cause flooding damages to adjacent or downstream property owners. Specific sections of the Texas Water Code that may be applicable to storm water drainage in Lufkin include the following:

- Title 2 (State Water Administration), Subtitle B. (Water Rights)
- Title 2 (State Water Administration), Subtitle C. (Water Development)

3. REVIEW AND APPROVAL OF DRAINAGE PLANS

3.1 TYPES OF SUBMITTALS

The types of engineering submittals typically made in connection with new development or drainage studies include the following:

- **Engineering Reports:** These documents, which may take the form of letter reports or more extensive and formal bound reports, shall describe the results of analyses of existing and/or proposed drainage conditions. Engineering reports will be submitted as a basis for better understanding of existing conditions (e.g., a flood plain revision report), to support a request for approval of construction documents for a proposed facility (e.g., a preliminary engineering report for a roadway improvement project), or to serve as a plan for future conditions (e.g., a master drainage report for a given watershed).
- **Construction Documents:** These include engineering drawings and specifications for a proposed facility or development which will affect storm water drainage or flood protection.
- **Permit Applications:** These are applications for building permits, flood plain fill permits, and other permits required by the City of Lufkin.

3.2 ACTIVITIES FOR WHICH SUBMITTALS TO THE CITY ARE REQUIRED

The City of Lufkin requires that engineering submittals be prepared for all activities which may affect the rate, direction, or volume of storm runoff or the depth and velocity of flow in primary and secondary drainage systems within the City's incorporated boundaries or ETJ. These activities include, but are not limited to, the following:

- new development;
- modifications to existing developments;
- detention design;
- channel improvements;
- new channel structures (bridges, culverts, etc.);
- flood plain reclamation (fill);
- hydraulic studies;
- watershed hydrologic studies;
- secondary drainage improvements.

Associated with each of these activities is the potential for adverse impacts on storm drainage. It is for this reason that the City of Lufkin regulates these types of activities.

3.3 GENERAL REQUIREMENTS FOR VARIOUS SUBMITTALS

The various submittals presented to the City of Lufkin for review should be as complete and as well-documented as possible. The general requirements described in this section should be satisfied for all submittals. The intent of these requirements is to insure that the following aspects of the proposed activity are made clear to the reviewer:

- the location of the project;
- the scope of the project;
- the intent of the proposed activity;
- the ways in which the proposed activity will alter existing drainage conditions;
- the potential for adverse impacts due to the completion of the proposed activity;
- the methods, data, and assumptions used in analyses of the proposed activity;
- the results of all hydrologic and hydraulic analyses;
- the location, configuration, and adequacy of proposed impact mitigation measures;
- the compatibility of the proposed activity and any related mitigation measures with City of Lufkin drainage criteria and the latest master drainage plan for the watershed.

In order to satisfy these requirements, engineering reports shall be prepared in such a way as to "stand alone." This means that each report should be written in such a manner as to include all of the necessary information without referencing previous submittals. Each report should utilize text, tables, and exhibits to thoroughly document the methods, data, and assumptions used in completing analyses of the proposed activity as well as the results obtained. Detailed computations and computer printouts should be attached to the report in the form of appendices. All reports should be bound to insure that the report text, exhibits, and attachments stay together. ***All reports and accompanying materials should be submitted in a manageable format. Maps should be 24" x 36" or smaller. All maps and other exhibits must be legible and information shall be presented a in clear and concise manner.***

The following exhibits and calculations should be submitted with engineering reports as appropriate:

- **Vicinity Map:** A map showing the project site with respect to recognizable landmarks in the vicinity. This could be a city map with the boundaries of a new development or the limits of a channel improvement project indicated to mark the project location.
- **Site Map:** This is a detailed map of the project site which illustrates the type and extent of activities which are proposed to be completed. For new developments, a plat with all proposed streets, lot boundaries, etc. may be used to satisfy this requirement.
- **Watershed or Drainage Map:** A watershed or drainage map which illustrates all drainage boundaries, flow directions, contours (2 feet intervals) and computation points.

- **Discharge Calculations:** Calculations specifying computed discharges at key locations, with comparisons of existing and proposed discharges where appropriate. Drainage areas, runoff coefficients, rainfall depths and intensities, infiltration loss parameters, unit hydrograph parameters, and other applicable hydrologic data should be included and clearly documented. For computer applications, printouts should be attached.
- **Hydraulic Calculations:** Hydraulic calculations specifying the methods used in analyzing channels, storm sewers, and other hydraulic structures and providing a summary of the results obtained. Cross-section data, roughness coefficients, flow rates, and other data should be clearly documented. For computer applications, printouts should be attached.
- **Benchmark Information:** A description of the benchmark used to establish existing and proposed elevations in the project area, including the exact location, the elevation, and the source of the elevation.
- **Right-of-Way Map:** A map which illustrates existing and proposed channel and utility rights-of-way and easements. Include both underground and overhead utilities and all drainage easements.
- **Soils Report:** A soils report, prepared by a qualified geotechnical engineer, which identifies the existing soil types and assesses the suitability of the soil for the proposed activity. The soils report should address erosion and slope stability in areas subject to the action of storm runoff.
- **Plotted Stream Profile:** A profile of the subject stream which includes computed water surface profiles, existing and proposed flow-line profiles, the locations of existing and proposed bridges, culverts, and utility crossings, the locations of tributary confluence's and major storm sewer outfalls in or near the project area, and the locations of hydraulic structures such as dams, weirs, and drop structures.
- **Plotted Cross-Sections:** Typical cross-sections of the subject stream for both existing and proposed conditions.
- **Flood Plain Maps:** A Flood Insurance Rate map showing the boundaries of the existing 100-year flood plain and floodway in the project area and a separate map which illustrates proposed changes in flood plain or floodway boundaries.
- **Facility Layout Map:** Plan, elevation, and cross-section views of drainage facilities such as detention basins, roadway culverts, bridges.
- **Computer Data Files:** All drawings shall be provided to the City Engineering Department on a 3 ½ " computer media. All drawing files shall be AutoCad Release 13 or EaglePoint W13. Software requirements may change as newer versions are released. Storm sewer data will be checked using Haestad Methods StormCad. Storm sewer data provided for StormCad will shorten the review period.

3.4 REVIEW & APPROVAL OF SUBMITTALS TO THE ENGINEERING DEPARTMENT

Upon receiving an engineering submittal, representatives of the Engineering Department will check it for completeness and will request additional information as needed. Upon receiving all of the information necessary to thoroughly evaluate the submittal, the Engineering Department will complete the review. Written comments will be forwarded to the submitter, who will make any corrections or adjustments to the analysis and re-submit a final package. Upon determining that all necessary corrections and adjustments have been made, the Engineering Department will prepare a written acceptance of the submittal. For submittals involving new building construction or repair of existing structures, approvals from the Building Inspection Department, Planning and Zoning Department, and Fire Marshal may be required in addition to approval from the Engineering Department.

4. GENERAL REQUIREMENTS FOR NEW DEVELOPMENT

4.1 BASIC DRAINAGE POLICIES

The basic storm water drainage policies adopted by the City of Lufkin are as follows.

- Strive to provide a 100-year level of protection with regard to flooding of homes and businesses.
- Mitigate adverse impacts with regard to flooding damages on upstream or downstream properties.
- Maintain consistency with the provisions of the National Flood Insurance Program.

4.2 SUMMARY OF REQUIREMENTS FOR INDIVIDUAL DRAINAGE FACILITIES

Table 4-1 provides a concise summary of requirements for individual components of storm water drainage facilities. As indicated in the table, requirements vary with the drainage area and type of drainage facility. More detailed discussions of requirements for the various types of drainage facilities may found in the sections following Table 4-1.

TABLE 4-1: CONCISE SUMMARY OF REQUIRED DRAINAGE CRITERIA

Facility or Analysis	Primary Event	Primary Design Requirement	Secondary Event	Secondary Design Requirement
Drainage Area < 100 Acres				
Street Gutters	5-Year	WSEL Below Top of Curb	5-Year	10' Dry Travel Lane for Major Thoroughfares
Storm Sewers	5-Year	WSEL Below Top of Curb	25-Year	WSEL < 6" Above Crown of Roadway
Roadside Ditches	5-Year	WSEL Below Top of Bank	25-Year	WSEL < 6" Above Crown of Roadway
Open Channels	25-Year	1 Foot Minimum Freeboard	25-Year	Acceptable Flow Velocity
Culverts	25-Year	Maximum Velocity < 8 Feet Per Second	25-Year	Roadway Above Flood Level
Bridges	25-Year	Low Chord 1' Above Flood Level or At Bank	100-Year	Roadway Above Flood Level
Detention Basins	25-Year	1 Foot Min. Freeboard	100-Year	Pass Peak Discharge
Drainage Area > 100 Acres But < 250 Acres				
Storm Sewers	10-Year	WSEL Below Top of Curb	50-Year	WSEL < 6" Above Crown of Roadway
Roadside Ditches	10-Year	WSEL Below Top of Bank	50-Year	WSEL < 6" Above Crown of Roadway
Open Channels	50-Year	1 Foot Minimum Freeboard	25-Year	Acceptable Flow Velocity
Culverts	50-Year	Maximum Velocity < 8 Feet Per Second	50-Year	Roadway Above Flood Level
Bridges	50-Year	Low Chord 1' Above Flood Level or At Bank	100-Year	Roadway Above Flood Level
Detention Basins	50-Year	1 Foot Min. Freeboard	100-Year	Pass Peak Discharge
Drainage Area > 250 Acres				
Storm Sewers	25-Year	WSEL Below Top of Curb	100-Year	WSEL < 6" Above Crown of Roadway
Roadside Ditches	25-Year	WSEL Below Top of Bank	100-Year	WSEL < 6" Above Crown of Roadway
Open Channels	100-Year	1 Foot Minimum Freeboard	25-Year	Acceptable Flow Velocity
Culverts	100-Year	Maximum Velocity < 8 Feet Per Second	100-Year	Roadway Above Flood Level
Bridges	100-Year	Low Chord 1' Above Flood Level or At Bank	100-Year	Roadway Above Flood Level
Detention Basins	100-Year	1 Foot Min. Freeboard	100-Year	Pass Peak Discharge

4.3 HYDROLOGIC ANALYSIS

The basic requirements for hydrologic analyses are as follows.

- For drainage areas less than 250 acres, the Rational Method may be used to compute peak runoff rates for all storm frequencies.
- For drainage areas greater than 250 acres, the HEC-1 computer program should be used to compute peak runoff rates and runoff hydrographs. HEC-1 models for the various Lufkin watersheds will be maintained by the City of Lufkin.

4.4 HYDRAULIC ANALYSIS OF OPEN CHANNELS AND ENCLOSED SYSTEMS

For hydraulic analyses of open channels and enclosed major drainage systems, the following requirements will apply.

- For open channels and enclosed drainage systems receiving storm runoff from drainage areas of 250 acres or more, the HEC-2 computer program should be used to compute water surface profiles and establish design water surface elevations.
- For drainage facilities receiving storm runoff from watersheds of less than 250 acres, simplified single cross-section methods may be utilized to establish design water surface elevations and other hydraulic data at specific locations such as storm sewer and detention outfalls.

4.5 LOT GRADING AND DRAINAGE

Individual lots should be graded in accordance with the following guidelines.

- Lots should be graded to drain to a street, swale, or ditch at a minimum slope of 1%.
- Wherever possible, sheet flow from individual lots should not cross adjacent lots before entering a street, swale, ditch, or other drainage facility.
- All finished floor elevations should be at least 8 inches above the highest finished ground elevation immediately adjacent to the slab.
- All lot grading shall be in accordance with Exhibits 4-5, 4-6, and 4-7.
- All finished floor elevations should be at least 1 foot above the design water surface elevation or computed base flood elevation in any adjacent drainage facility.

4.6 STREETS AND STORM SEWERS

All streets and storm sewers must be designed in accordance with the following guidelines.

- Street gutters along residential streets should carry peak runoff rates from a 5-year storm event without overtopping curbs. Major thoroughfares should accommodate 5-year peak runoff rates with a minimum 10-foot dry travel lane and 25-year peak runoff rates without overtopping curbs.
- For systems draining less than 100 acres, storm sewers should be designed to convey 5-year peak runoff rates at a maximum water level not to exceed the top of curb. Peak 25-year

runoff rates shall be accommodated with a maximum flow depth of 6 inches of depth above the crown of the roadway.

- For systems draining more than 100 acres but less than 250 acres, storm sewers should be designed to convey 10-year peak runoff rates at a maximum water level not to exceed the top of curb. Peak 50-year runoff rates shall be accommodated with a maximum flow depth of 6 inches of depth above the crown of the roadway.
- For systems draining more than 250 acres, storm sewers should be designed to convey 25-year peak runoff rates at a maximum water level not to exceed the top of curb. Peak 100-year runoff rates shall be accommodated with a maximum flow depth of 6 inches of depth above the crown of the roadway.
- The minimum inside pipe dimension for storm sewer systems will be 18 inches. The minimum design velocity for full gravity flow will be 2.0 feet per second.
- Starting water surface elevations for calculations of hydraulic grade line elevations in storm sewer systems shall be set equal to the elevation in the receiving stream for the storm frequency that corresponds to the design storm frequency for the storm sewer system. This requirement shall apply to both primary and secondary design requirements for storm sewer systems. For example, if the primary requirement is to convey 5-year flows below the top of curb, the 5-year water surface elevation in the receiving stream should be used as the starting elevation for hydraulic grade line calculations. If the secondary requirement is to convey 25-year flows at a maximum of 6 inches above the crown of the roadway, the 25-year water surface elevation in the receiving stream should be used as the starting elevation.

4.7 ROADSIDE DITCHES AND CULVERTS IN THOSE DITCHES

The following guidelines must be followed in the design of roadside ditches and culverts to be placed in roadside ditches.

- For drainage areas less than 100 acres, roadside ditches and culverts in those ditches should be designed to convey 5-year peak runoff rates at maximum water levels not to exceed top of bank elevations. Peak 25-year runoff rates shall be accommodated with a maximum flow depth of 6 inches above the crown of the roadway.
- For drainage areas greater than 100 acres but less than 250 acres, roadside ditches and culverts in those ditches should be designed to convey 10-year peak runoff rates at maximum water levels not to exceed bank elevations. Peak 50-year runoff rates shall be accommodated with a maximum flow depth of 6 inches above the crown of the roadway.
- For drainage areas greater than 250 acres, roadside ditches and culverts in those ditches should be designed to convey 25-year peak runoff rates at maximum water levels not to exceed top of bank elevations. Peak 100-year runoff rates shall be accommodated with a maximum flow depth of 6 inches above the crown of the roadway.
- The minimum culvert size for roadside ditches shall be 18 inches.

4.8 OPEN CHANNELS, CULVERTS, AND BRIDGES

Open channels and associated culverts and bridges must be designed in accordance with the following guidelines.

- Channels draining less than 100 acres should be designed to convey 25-year peak runoff rates with a minimum freeboard of 1.0 foot. Culverts should be designed to convey 25-year peak runoff rates at a flow velocity less than or equal to 8 feet per second with the top of road above the upstream 25-year flood level. Bridges should be designed with the low chord at least 1 foot above the 25-year design water surface elevation in the channel or at the channel bank, whichever is lower, and with the top of road above the upstream 100-year flood level.
- Channels draining more than 100 acres but less than 250 acres should be designed to convey 50-year peak runoff rates with a freeboard of 1.0 foot. Culverts should be designed to convey 50-year peak runoff rates at a flow velocity less than or equal to 8 feet per second with the top of road above the upstream 50-year flood level. Bridges should be designed with the low chord at least 1 foot above the 50-year design water surface elevation in the channel or at the channel bank, whichever is lower, and with the top of road above the upstream 100-year flood level.
- Channels draining more than 250 acres should be designed to convey 100-year peak runoff rates with a freeboard of 1.0 foot. Culverts should be designed to convey 100-year peak runoff rates at a flow velocity less than or equal to 8 feet per second with the top of road above the upstream 100-year flood level. Bridges should be designed with the low chord at least 1 foot above the 100-year design water surface elevation in the channel or at the channel bank, whichever is lower.

4.9 STORM WATER DETENTION

On-site storm water detention will be required only under the following conditions:

- No detention will be required for any new development with impervious surfaces equal to or less than 14,000 square feet.
- If the proposed development will increase the potential for flood damages and/or increase the danger to the safety of the general public; the development has impervious surfaces greater than 14,000 square feet; and the proposed site is less than 5 acres then detention will be required to offset the effects of the development for a 5-year storm event.
- If the entire development covers at least 5 acres and calls for an impervious cover of at least 50% then detention will be required for a 25-year storm event in order to reduce discharges back to existing conditions.
- In lieu of on-site detention the developer may enter into an agreement with the City of Lufkin under the City's flood mitigation ordinance if the development is located within the influence of a regional detention facility and no localize flooding exists.

SECTION 4: GENERAL REQUIREMENTS FOR NEW DEVELOPMENT

The following guidelines must be followed in the design of storm water detention facilities.

- Storm water detention basins serving watershed areas less than 100 acres should be designed to provide sufficient storage volume to mitigate impacts on peak flow rates from a 25-year, 24-hour storm event unless otherwise noted above. Basin design may be based on a simple triangular hydrograph approach.
- Storm water detention basins serving watershed areas greater than 100 acres but less than 250 acres should be designed to provide sufficient storage volume to mitigate impacts on peak flow rates from a 50-year, 24-hour storm event. Basin design may be based on a manual storage routing analysis or a similar analysis completed using an accepted detention design/analysis computer program.
- Storm water detention basins serving watershed areas greater 250 acres should be designed to provide sufficient storage volume to mitigate impacts on peak flow rates from a 100-year, 24-hour storm event. Basin design will be based on a detailed storage routing analysis using the HEC-1 computer program and the latest model of the watershed in which the facility is to be located.
- Discharge structures for all detention facilities shall be designed so that the facility can accommodate the runoff from a 100-year, 24-hour storm event without overtopping the banks of the basin.
- All basins should be designed so that overflows occurring during extreme storm conditions (> 100-year) will be directed to the nearest drainage channel without flooding homes and businesses. Overflow depths up to 1 foot above basin bank elevations should be considered.
- Parking lot storage is acceptable as long as the maximum ponding depth does not exceed 6 inches. Storage may be provided underneath pavement in a pipe network system.

4.10 RIGHT-OF-WAY

Sufficient right-of-way must be permanently set aside to allow for the construction of the most extensive permanent drainage facilities proposed to pass through the development in the future. These facilities may include open or enclosed channels, storm sewers, ditches, or swales. For channels, the width of the right-of-way must be adequate to provide for the channel itself plus minimum maintenance berm widths. For enclosed systems, the minimum right-of-way width is equal to the widest dimension of the underground conduit plus two times the maximum depth from finished ground to the invert of the conduit, or 30 feet, whichever is greatest.

4.11 IMPACT IDENTIFICATION AND MITIGATION

Adverse impacts associated with new development must be identified and mitigated. Acceptable mitigation measures may include storm water detention, creation of new flood plain storage, channel improvements, and improvements to channel structures. A "zero impact" policy will be enforced by the City of Lufkin. No adverse impacts on downstream peak flow rates or upstream flood levels will be allowed. No net loss in existing flood plain storage will be allowed.

4.12 EROSION CONTROL

All drainage facilities must be designed and maintained in a manner which minimizes the potential for damage due to erosion. No bare earthen slopes will be allowed. Various slope treatments, including turf establishment, concrete slope paving, and rip-rap, are accepted. Flow velocities should be kept below permissible values for each type of slope treatment. Interceptor structures and backslope swale systems are required to prevent sheet flows from eroding the side slopes of open channels and detention facilities.

4.13 MAINTENANCE

Provisions for adequate maintenance must be made in the design of all drainage facilities. Sufficient right-of-way must be set aside, slopes must be kept at or below maximum values, and slope treatments must be properly completed. Access to drainage facilities must not be impeded.

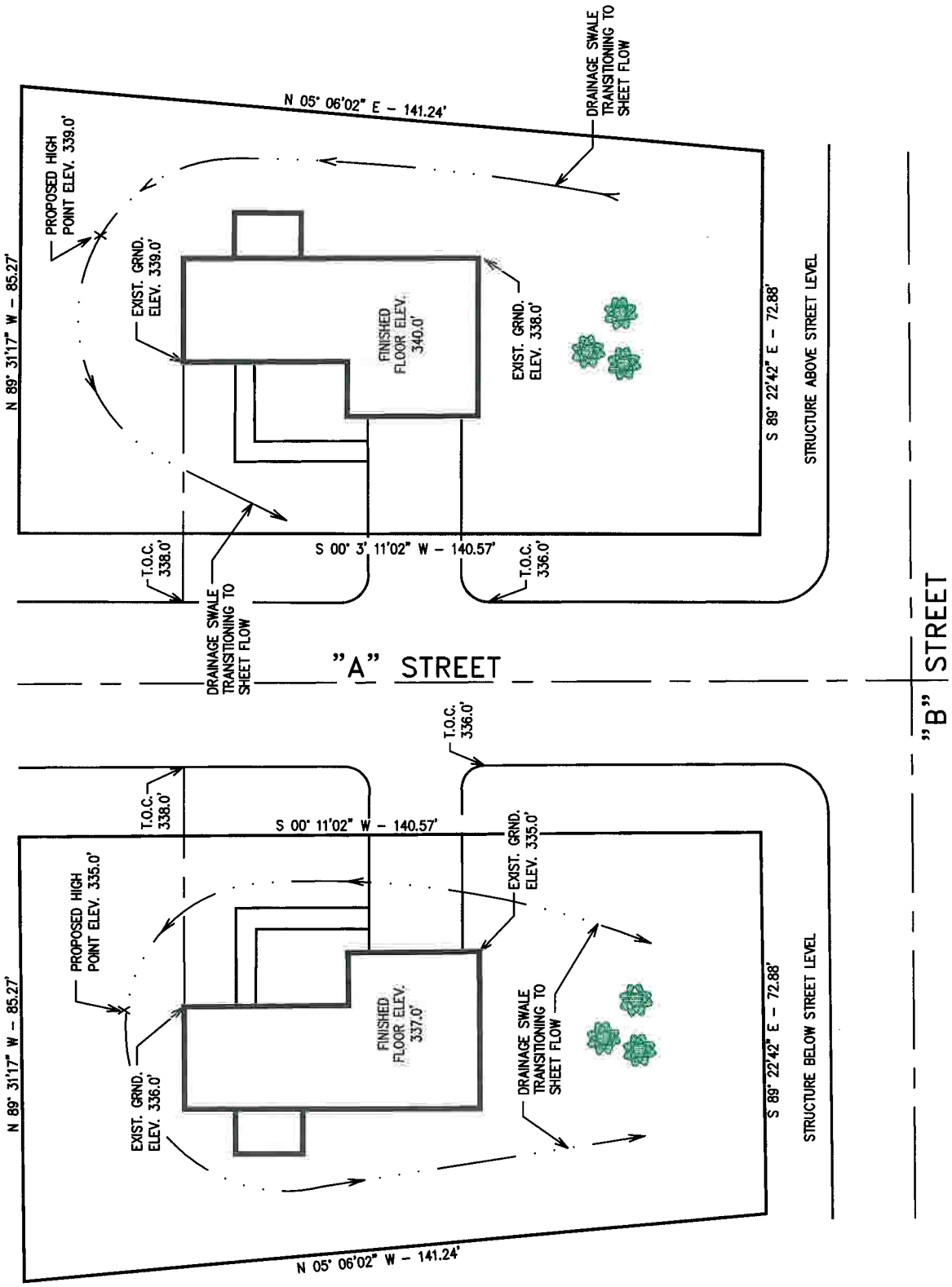

CITY OF LUFKIN
LUFKIN, TEXAS

DESIGN CRITERIA MANUAL

REQUIREMENTS FOR LOT DRAINAGE DESIGN (PLAN VIEW)

DATE	MARCH 1997	EXHIBIT NO.	4-1

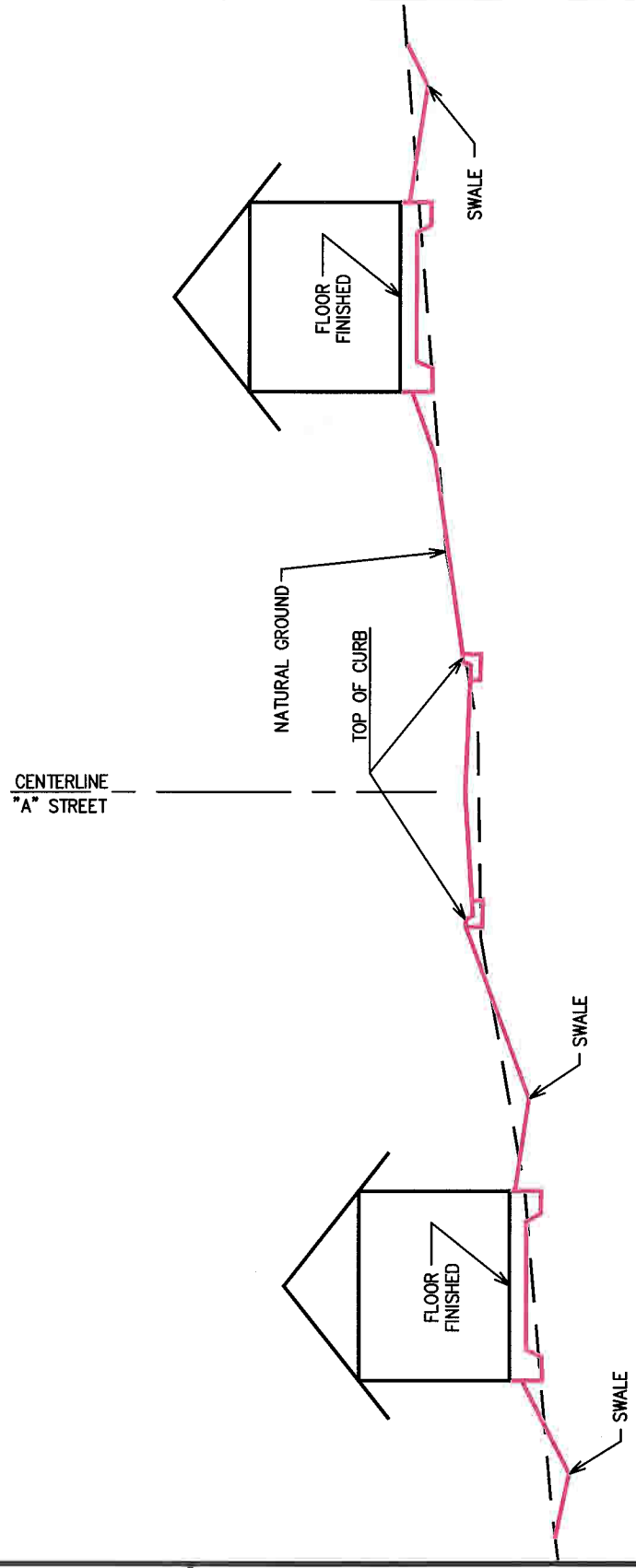

CITY OF LUFKIN
LUFKIN, TEXAS

DESIGN CRITERIA MANUAL

REQUIREMENTS FOR LOT DRAINAGE DESIGN (CROSS-SECTION VIEW)

DATE	EXHIBIT NO.
MARCH 1997	4-2

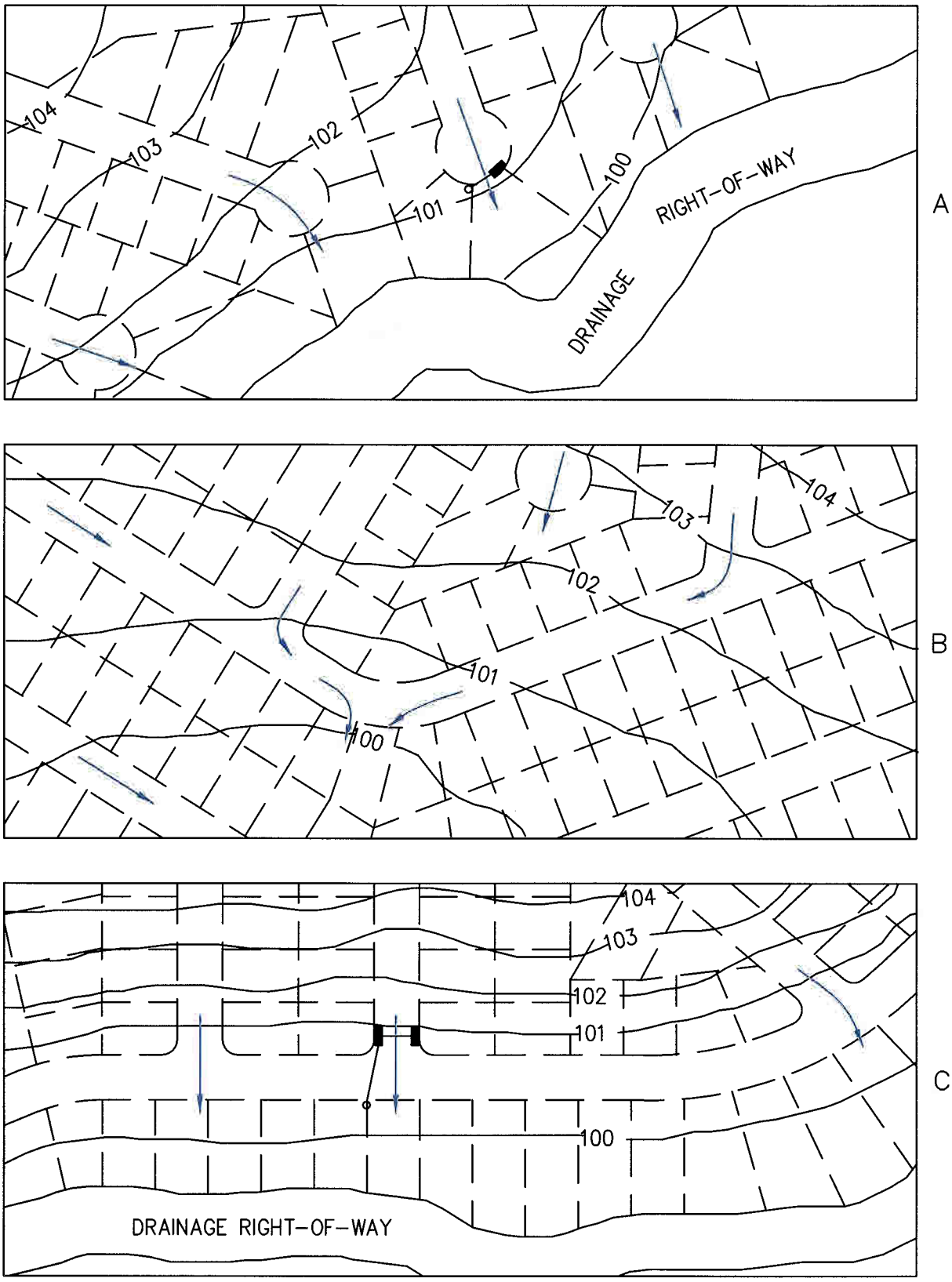

CITY OF LUFKIN
LUFKIN, TEXAS

DESIGN CRITERIA MANUAL

UNDESIRABLE SHEET FLOW PATTERNS

DATE	MARCH 1997	EXHIBIT NO.	4-3

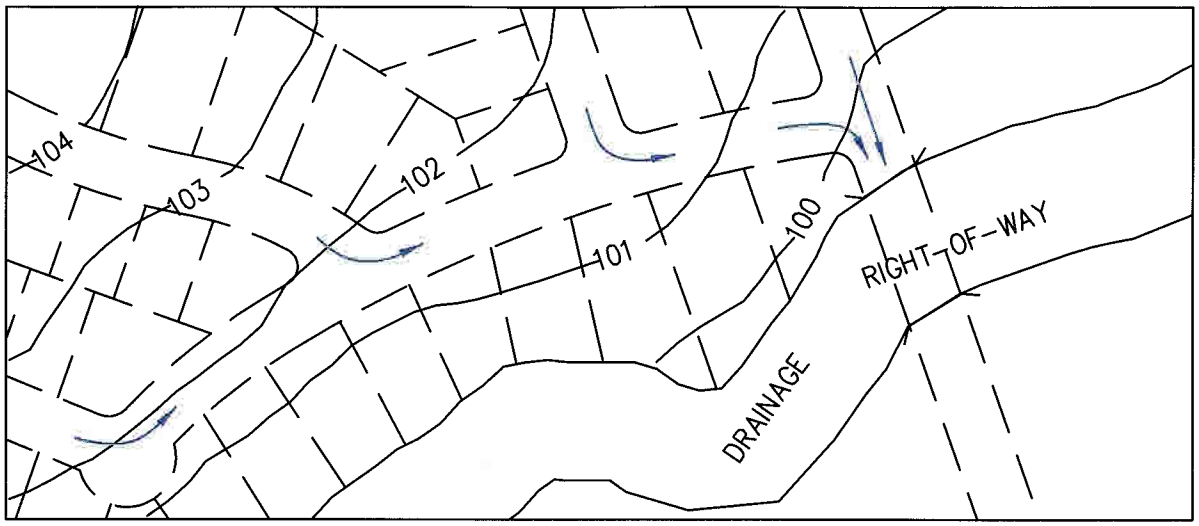

A

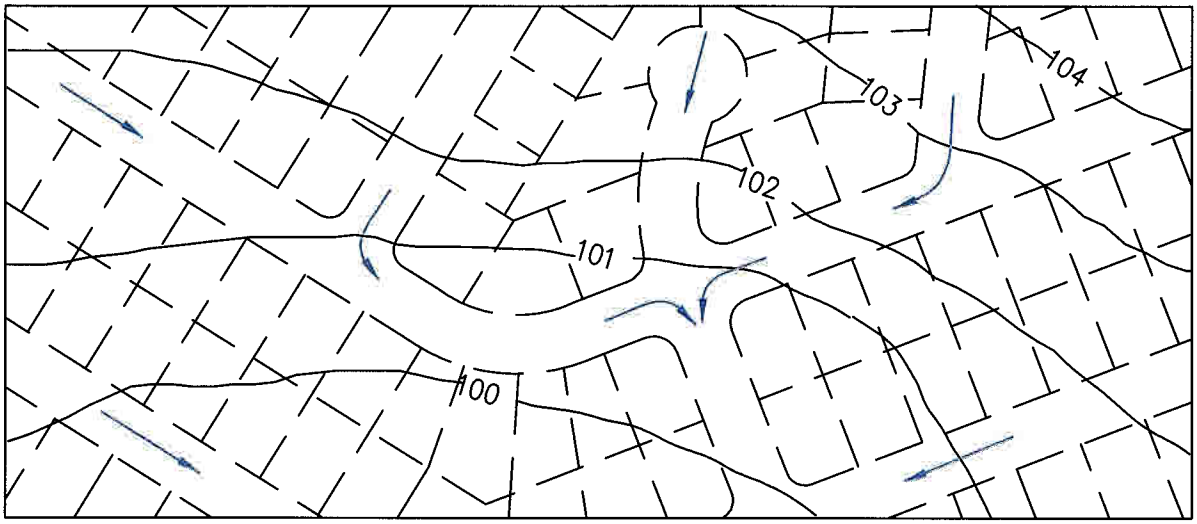

B

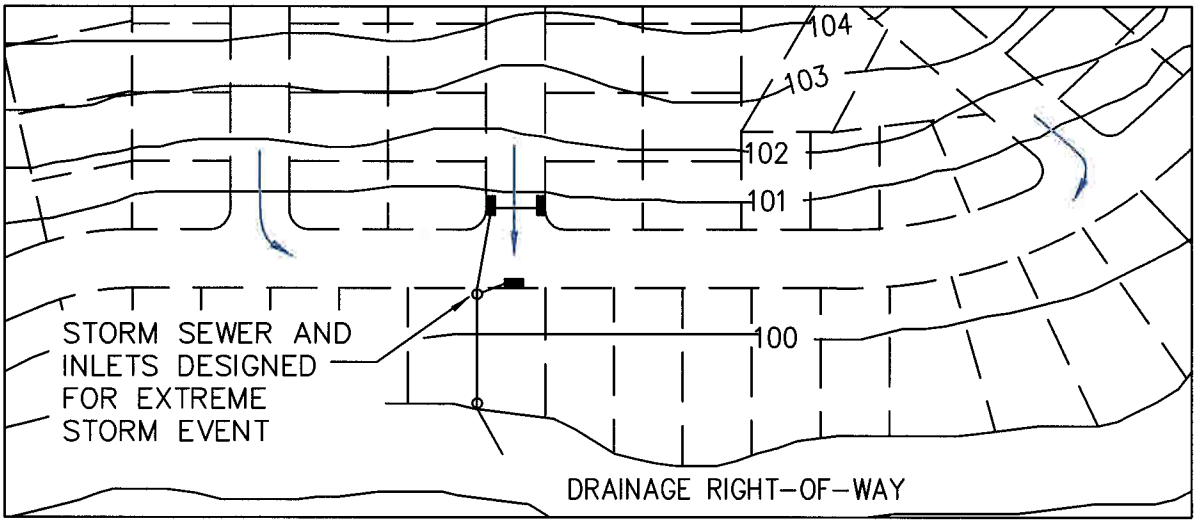

C

CITY OF LUFKIN
LUFKIN, TEXAS

DESIGN CRITERIA MANUAL

ACCEPTABLE SHEET FLOW PATTERNS

DATE	MARCH 1997	EXHIBIT NO.	4-4

CITY OF LUFKIN, TEXAS

DESIGN CRITERIA MANUAL

QUALIFICATION: all grades shown are minimums. For 25-year storm protection, the builder should increase the elevation of the foundation to a minimum of 2.5 feet above the top of curb unless storm sewer relief is available. If adequate storm sewers are available, the 1.5 feet above the top of the curb is adequate providing other outside water does not drain acorss the lot.

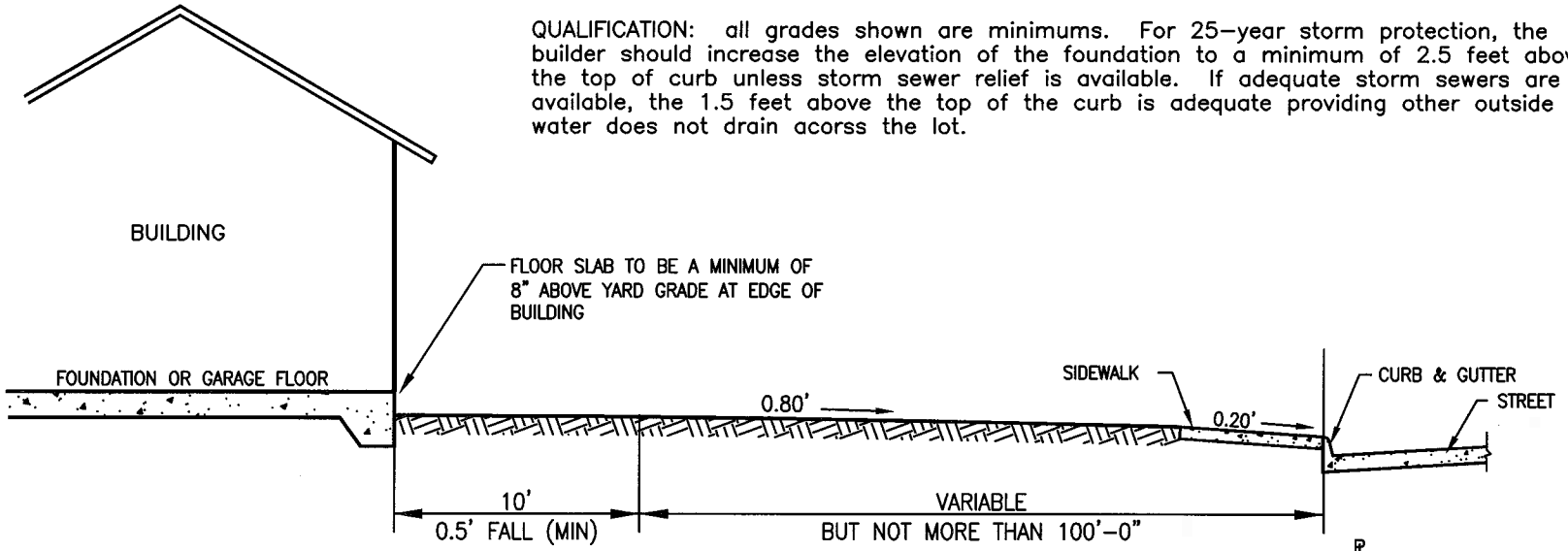

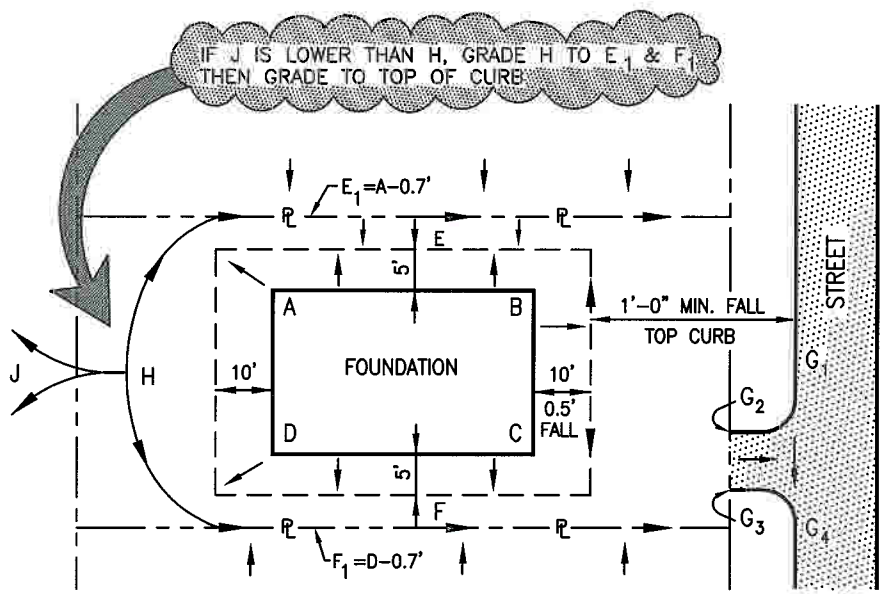

ELEV. A=B=D=C
ELEV. E=A-0.5'
ELEV. F=A-0.5'
ELEV. H=A-0.5'

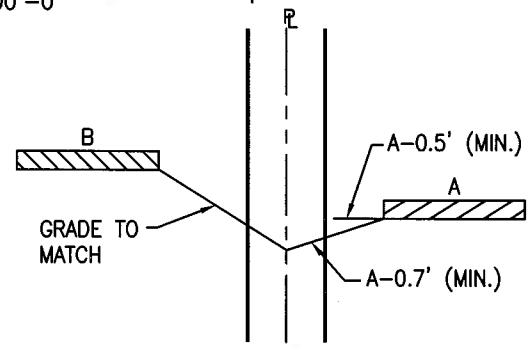

SECTION AT TYP. SIDE YARD ℄.

DRIVEWAY GRADE MINIMUM
G_2 ELEV. IS 0.6' HIGHER THAN G_1
G_3 ELEV. IS 0.6' HIGHER THAN G_4
G_2 ELEV. DOES NOT NECESSARILY EQUAL G_3 ELEV.

A = B = C = D = 1.5' ABOVE TOP OF CURB MEASURED AT CURB HIGH POINT

TYPICAL YARD GRADING LAYOUT "GRADE A"

DATE MARCH 1997

EXHIBIT NO. 4-5

CITY OF LUFKIN, TEXAS

DESIGN CRITERIA MANUAL

QUALIFICATION: The City assumes no liability, implied or otherwise, for the proper drainage of any lot that contains a structural floor elevation which is less than 2.5 feet above the top of curb (or top of drainage ditch). The minimum grades required here are to provide for the drainage away from the building and do not provide for the proper drainage away from the lot which is the contractor's responsibility.

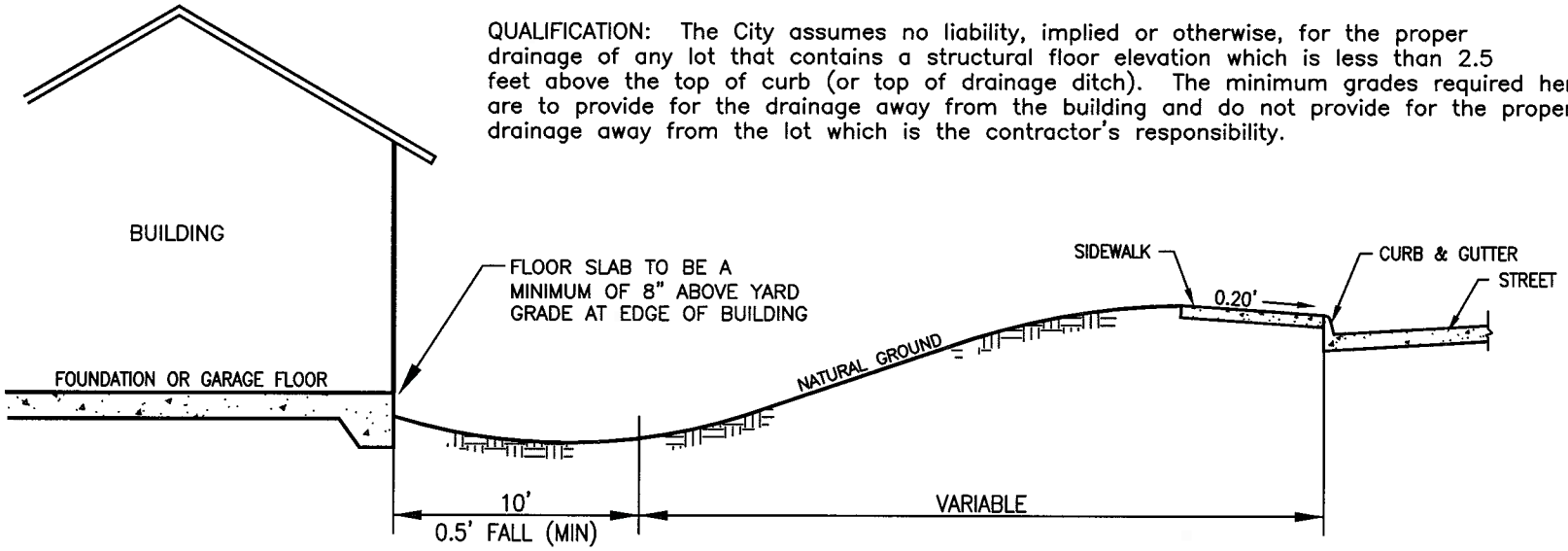

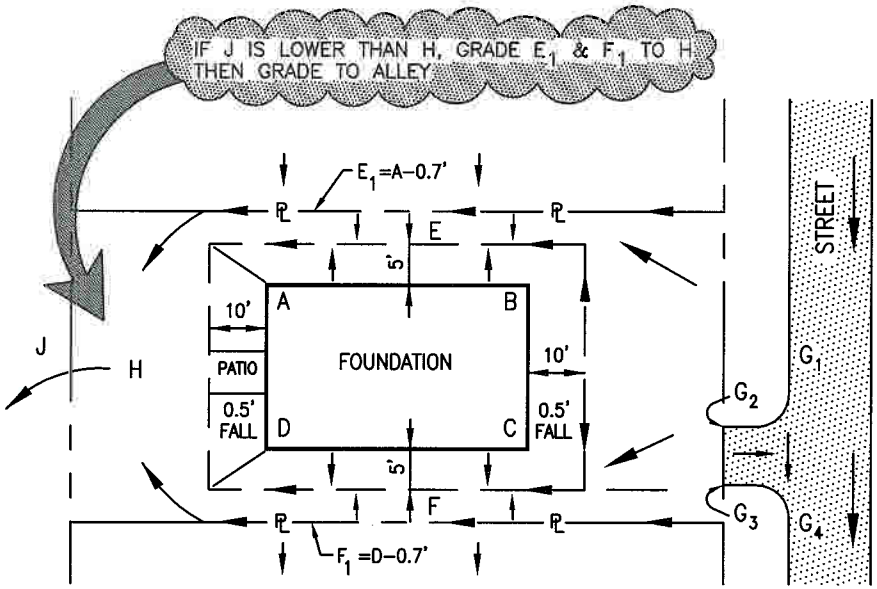

ELEV. A=B=D=C
ELEV. E=A−0.5'
ELEV. F=A−0.5'
ELEV. H=A−0.5'

DRIVEWAY GRADE MINIMUM
G_2 ELEV. IS 0.6' HIGHER THAN G_1
G_3 ELEV. IS 0.6' HIGHER THAN G_4
G_2 ELEV. DOES NOT NECESSARILY EQUAL G_3 ELEV.

J=A−1.5' WHERE PRACTICAL

TYPICAL YARD GRADING LAYOUT "GRADE B"

DATE MARCH 1997

EXHIBIT NO. 4-6

CITY OF LUFKIN, TEXAS

DESIGN CRITERIA MANUAL

COMMERCIAL LOT GRADING (CROSS-SECTION VIEW)

DATE MARCH 1997

EXHIBIT NO. 4-7

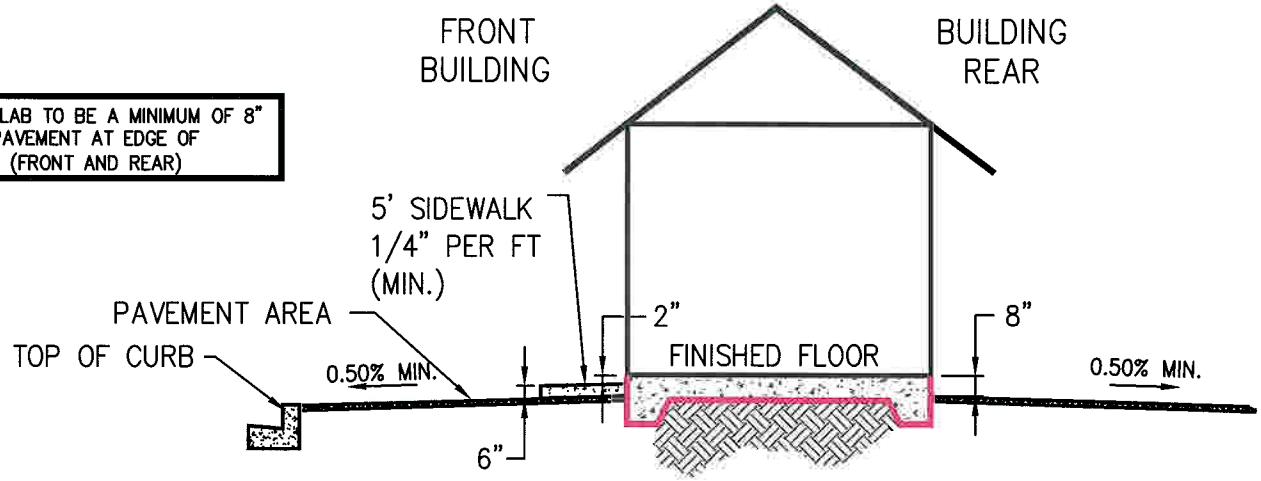

COMMERCIAL BUILDING
FINISHED FLOOR HEIGHT
IN RELATION TO PAVEMENT

NOTE:
GRADES MAY BE MODIFIED TO COMPLY WITH ADA REQUIREMENTS.

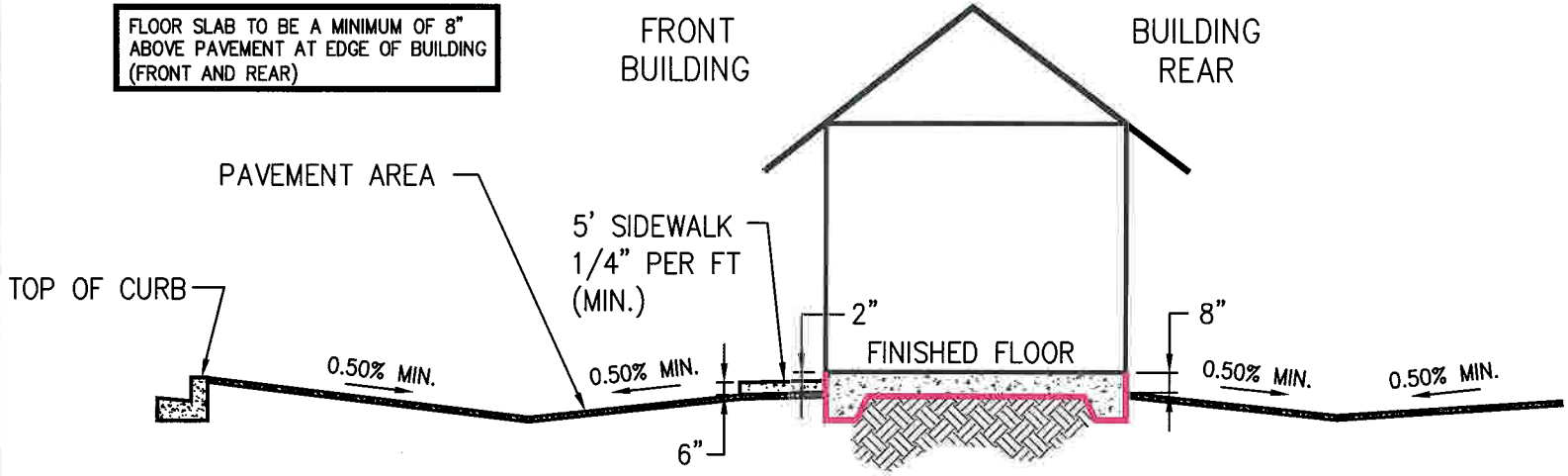

COMMERCIAL BUILDING
FINISHED FLOOR HEIGHT
IN RELATION TO PAVEMENT

5. GENERAL REQUIREMENTS FOR VARIOUS SUBMITTALS

5.1 NEW DEVELOPMENT

Submittals for all new development will include the following items:

- For new developments with impervious surfaces less than 14,000 square feet no hydrologic impact analysis or engineering report will be required. Other requirements still apply (topographic maps, site plans, etc..);
- a plat of the development illustrating property boundaries, individual lot boundaries, streets, drainage easements, topographic contours (2 feet intervals) etc.;
- a hydrologic impact analysis which identifies the potential effects of the development on downstream peak flow rates;
- if necessary, a hydraulic impact analysis which identifies the potential effects of the development on upstream flood levels;
- a preliminary engineering report which presents the results of impact analyses, describes proposed mitigation measures, provides construction cost estimates, etc.;
- where available watershed maps shall be completed on City of Lufkin contour maps.

Preliminary construction plans for proposed streets, storm drainage facilities, utilities, and other features may be submitted along with the preliminary engineering report. Final construction plans should be prepared after the City of Lufkin Engineering Department has completed its review of the report and issued written comments. All drawings or maps shall be of a adequate quality to fully illustrate the required data. All drawings shall be provided at a adequate scale.

5.2 WATERSHED HYDROLOGIC STUDIES

Major watershed hydrologic studies will be summarized in a report which contains sufficient text, exhibits, and computer output to completely describe the methods, data, and assumptions used in the analysis, as well as the results obtained. Information provided in the report should include the following:

- a verbal description of the analysis and the results obtained;
- tabulations of all hydrologic modeling parameters;
- tabulations of all computed peak flow rates;
- a watershed map which illustrates the borders of each sub-area included in watershed modeling;
- a hydrologic parameter map which illustrates all watercourse lengths, drainage areas, and developed areas;
- output from all hydrologic models used in the analysis;
- a computer diskette containing input files for all hydrologic models.

5.3 HYDRAULIC STUDIES INVOLVING PRIMARY DRAINAGE COMPONENTS

For hydraulic analyses and designs involving primary drainage system components, an engineering report containing the following items should be submitted:

- sufficient text to summarize the methods, data, and assumptions used in completing the analysis, as well as the results obtained;
- calculations and other information supporting the flow rates used in the analysis;
- tabulations of hydraulic modeling data and results;
- vicinity and site maps which illustrate the location of the project area and the extent of the stream reach being analyzed;
- a plotted stream profile(s);
- plotted cross-sections of the stream with computed flood levels superimposed;
- a copy of the effective Flood Insurance Rate Map for the project area and, as needed, a proposed conditions flood plain and floodway map which illustrates proposed changes in flood plain and floodway boundaries;
- copies of all hydraulic calculations;
- an analysis of the effects of proposed improvements on downstream peak flow rates and upstream flood levels;
- recommendations for mitigating any adverse impacts associated with proposed improvements to channels or structures;
- output from all hydraulic computer models used in the analysis;
- a computer diskette containing input files for all hydraulic models.

For studies involving improvements to open channels and hydraulic structures or designs of new open channels, a right-of-way map should also be submitted. Preliminary construction plans may be submitted along with the engineering report. Final plans should be prepared after the City of Lufkin Engineering Department has completed its review of the engineering report and issued comments.

5.4 DETENTION DESIGN

The following information must be submitted in support of designs for detention facilities:

- vicinity, site, and watershed maps which clearly illustrate the location of the facility, its physical extents and configuration, its drainage area, and the relationship of its drainage area to the overall boundaries of the major watershed in which it is located;
- a right-of-way map which illustrates all existing and proposed rights-of-way in the immediate vicinity of the detention facility;
- discharge calculations which identify peak flow rates for pre-development and post-development conditions for the design storm event;

- hydraulic calculations on which the design of the detention discharge structure is based;
- for facilities with a drainage area of less than 100 acres, calculations establishing the required detention storage volume;
- for facilities having a drainage area of 100 acres or more, a detention flood routing analysis which assesses the effectiveness of the detention basin in mitigating impacts on downstream peak flow rates;
- calculations involving the required capacity of supplemental and/or emergency discharge structures;
- exhibits which illustrate the configuration of the detention facility, inflow structure, and discharge structure;
- benchmark information;
- a soils report which discusses the suitability of the soil for construction of the proposed facilities.

These items should be submitted in supported of a written report which describes the proposed location and configuration of the detention facility, the methods used in the design of the facility, and the conclusions of the detention analysis with regard to the effectiveness of the facility in mitigating increases in downstream peak flow rates. Preliminary construction plans may be submitted along with the engineering report. Final plans should be prepared after the City of Lufkin Engineering Department has completed its review of the engineering report and issued comments

5.5 DESIGN OF SECONDARY DRAINAGE FACILITIES

For submittals involving the design of storm sewer systems, ditches, swales, and other secondary drainage facilities (drainage area less than 100 acres), the following items should be included:

- a report which summarizes the methods, data, and assumptions used in completing the design analysis, as well as the results obtained;
- vicinity and site maps which illustrate the location of the project area and the location and configuration of the proposed facilities;
- a watershed map which illustrates the boundaries of all sub-areas included in the analysis of the proposed facilities;
- calculations and other information supporting the flow rates used in the analysis;
- hydraulic calculations used in designing the facilities and in assessing their hydraulic performance under design storm conditions;
- an analysis of the effects of proposed improvements on downstream peak flow rates and upstream flood levels;
- recommendations for mitigating any adverse impacts associated with proposed drainage improvements;
- a plotted profile(s) of the storm sewer system, ditch, swale, etc.;

- for ditches and swales, a typical cross-section(s);
- output from computer programs used in the analysis;
- a computer diskette containing input files for any computer programs used in the analysis.

Preliminary construction plans may be submitted along with the engineering report. Final plans should be prepared after the City of Lufkin Engineering Department has completed its review of the engineering report and issued comments.

6. HYDROLOGIC & HYDRAULIC CONCEPTS

6.1 INTRODUCTION

This section presents a brief summary of hydrologic and hydraulic terms and concepts which are crucial to a basic understanding of the criteria presented in the manual.

6.2 DEFINITIONS OF BASIC TECHNICAL TERMS

- ***hydrology:*** the study of the processes through which atmospheric moisture passes between the time that it falls to the surface of the earth as rainfall and the time that it returns to the atmosphere.
- ***hydrograph:*** a graph which relates rate of flow and time
- ***infiltration:*** the process by which rainfall soaks into the ground
- ***runoff:*** precipitation which does not infiltrate into the ground, but instead makes its way to a storm drainage facility
- ***rainfall intensity:*** the rate at which rainfall occurs, typically expressed in inches per hour
- ***storm event:*** a single period of heavy rainfall, normally lasting from a few minutes to a few days
- ***time of concentration:*** the time required for water to travel from the most remote point in a watershed to the point at which a peak flow rate or runoff hydrograph is to be computed
- ***watercourse:*** a path which water follows from the boundary of a watershed to the watershed outlet
- ***probability:*** the chance, usually expressed in percent, that a storm event of a particular intensity and duration will occur in any given year. Equal to the reciprocal of the recurrence interval.
- ***recurrence interval:*** the average period of time which will elapse between storms of a particular intensity and duration (equal to the reciprocal of the probability)
- ***unit hydrograph:*** a runoff hydrograph which represents the response of a watershed to 1 inch of runoff
- ***Manning Equation:*** a mathematical formula which relates the velocity or rate of flow in a channel or conduit to the physical characteristics of the channel or conduit
- **cross-sectional area:** the total area available to carry flow, measured at a vertical plane (cross-section) which cuts across a channel or conduit parallel to the direction of flow
- ***wetted perimeter:*** the total distance along a channel or conduit cross-section which is in contact with water that is flowing in the channel or conduit
- ***hydraulic radius:*** a parameter computed as the cross-sectional area divided by the wetted perimeter

- ***roughness coefficient:*** a number which represents the relative resistance to flow in a channel or conduit
- ***conveyance:*** the ability of a channel or conduit to carry water in the downstream direction
- ***friction loss:*** a loss in energy associated with friction between flowing water and the sides of a channel or conduit;
- ***minor loss:*** a loss in energy associated with changes in flow direction or velocity
- ***flood plain:*** an area inundated by flood waters during or after a storm event of a specific magnitude

6.3 BASIC HYDROLOGIC CONCEPTS

6.3.1 The Hydrologic Cycle

The term *hydrologic cycle* refers to a series of processes through which moisture falls to earth as precipitation, and returns to the atmosphere. The basic processes involved in the hydrologic cycle include rainfall, infiltration, interflow, storage, evaporation, and transpiration. Exhibit 6-1 illustrates the interaction of these processes.

6.3.2 Design Rainfall Events

Rainfall normally occurs in irregular patterns with respect both to space and time. For hydrologic analyses, however, synthetic rainfall events are used. These events are developed through statistical analyses of long periods of recorded rainfall data. Design storms are defined by the recurrence interval and the duration. For example, a 100-year, 24-hour storm is a rainfall event for which the probability of occurrence is 1% in any given year and which has a duration of 24 hours. Statistical analyses of long-term historical rainfall records indicate that the 100-year, 24-hour rainfall depth for Lufkin is 11.5 inches. Table 6-1 provides a summary of the relationship between rainfall depth, duration, and recurrence interval for Lufkin, Texas.

TABLE 6-1: RAINFALL DATA FOR LUFKIN, TEXAS

	Rainfall Depth (inches) for Given Duration							
Recurrence Interval (years)	5 minute	15 minute	60 minute	2 hour	3 hour	6 hour	12 hour	24 hour
2	0.54	1.16	2.18	2.67	2.94	3.48	4.15	4.75
3	0.58	1.25	2.41	3.05	3.39	4.00	4.82	5.60
5	0.61	1.33	2.65	3.45	3.82	4.54	5.50	6.43
10	0.66	1.46	2.99	3.98	4.41	5.39	6.55	7.73
25	0.75	1.65	3.48	4.55	5.12	6.33	7.69	9.07
50	0.81	1.81	3.87	5.09	5.67	7.05	8.70	10.20
100	0.88	1.96	4.25	5.67	6.34	8.00	9.77	11.48

Sources: *USWB Technical Paper No. 40* and *NWS Hydrometeorological Report No. 35*

6.3.3 Infiltration & Runoff

When rainfall reaches the earth, a portion of the rainfall normally soaks into the ground. This process is called *infiltration*. The balance of the rainfall is called *runoff*. Infiltration increases with the porosity of the soil. Therefore, infiltration for clay soils is less than for sandy soils. Conversely, infiltration is reduced as the moisture content of a particular soil is increased. The process of infiltration ceases when the soil becomes saturated. Runoff varies inversely with infiltration. The greater the infiltration, the lesser the runoff, and vice versa.

6.3.4 Runoff Hydrographs

Runoff hydrographs are relationships between the rate of runoff and time. Hydrographs are important in that they provide information not only on the peak rate of runoff, but also on variations in runoff rates throughout the duration of a particular storm event. These variations can be significant in defining the response of a watershed to a rainfall event, especially when the watershed is large and runoff continues over many hours or days.

A *unit hydrograph* is a hydrograph which reflects the response of a watershed to a rainfall event which produces exactly 1 inch of runoff. Runoff hydrographs for storm events producing more or less than 1 inch of runoff are computed from a unit hydrograph by multiplying each individual flow rate in the unit hydrograph by the actual runoff volume in inches. Exhibit 6-2 illustrates the relationship between unit hydrographs and runoff hydrogaphs.

6.4 BASIC HYDRAULIC CONCEPTS

6.4.1 Conveyance

Conveyance is a measure of the capacity of a channel, flood plain, or hydraulic structure to carry storm water. Conveyance increases with the cross-sectional area of flow, the depth of flow in the structure, and the smoothness of the surfaces with which water comes into contact. For example, enlarging a drainage channel will increase the conveyance and the rate of storm water flow the channel will carry. Clearing away trees and brush from a channel will have the same effect. Replacing a corrugated steel pipe with a concrete pipe of the same diameter also results in an increase in flow conveyance because of the greater smoothness of the concrete pipe.

6.4.2 The Manning Formula

The Manning formula is perhaps the most widely-used relationship between hydraulic capacity and the physical condition of a flow-carrying structure. The equation is written as follows:

$$V = 1.49 \times 1/n \times S^{1/2} \times R^{2/3}$$

where: V = flow velocity in feet per second;

n = a roughness coefficient related to the relative condition of the channel or structure;

S = the slope of the channel or structure;

R = the hydraulic radius, which is computed as the flow area divided by the wetted perimeter.

Multiplying the flow velocity times the cross-sectional area yields the rate of flow. Adding the area term to the Manning equation for flow velocity yields the following form of the equation:

$$Q = 1.49 \times 1/n \times S^{1/2} \times R^{2/3} \times A$$

where: Q = the flow rate in cubic feet per second;

A = the cross-sectional area of flow in square feet.

In the Manning formula, the roughness coefficient is, as the name implies, a measure of the roughness of the surfaces with which water comes into contact. The rougher these surfaces, the higher the Manning roughness coefficient, or "n-value." Exhibit 6-3 illustrates some of the basic concepts associated with the Manning formula.

6.5 EFFECTS OF URBANIZATION

As used in this manual, the term "urbanization" includes activities such as land clearing, new development, roadway construction, improvements to drainage systems, changes in natural land topography, the placement of fill in flood-prone areas, and the establishment of pavements and other impervious surfaces. These types of activities have significant effects on the response of a watershed to rainfall. These effects may be summarized as follows.

- ***Increased Volume of Runoff:*** Urbanization is typically accompanied by an increase in the percentage of the ground surface that is covered by impervious materials. Because precipitation can no longer soak into the ground in areas covered by impervious materials, the proportion of the precipitation infiltrating into the ground is reduced. This in turn increases the proportion of the precipitation which becomes surface runoff.
- ***Increased Rate of Runoff:*** In most urbanized areas, drainage systems are developed to convey storm runoff safely away from areas occupied by homes, businesses, roadways, etc. These drainage systems are designed to collect and evacuate storm water as efficiently as possible. This efficiency tends to concentrate storm runoff more quickly than the natural drainage system in most areas. In addition, re-grading of natural slopes and the removal of flow-retarding vegetation, combined with the development of efficient drainage systems, eliminates natural storage which tends to attenuate runoff rates in non-urbanized areas. These factors cause runoff rates from urbanized areas to exceed rates from undeveloped areas, usually by a significant amount.
- ***Reduced Flood Plain Conveyance:*** In areas where development takes in flood-prone areas, lots and/or building pads are elevated by placing fill material. The placement of this material in flood plains tends to create obstructions to flow and therefore reduces the available conveyance in the flood plain. Similarly, the construction of elevated roads across flood-prone areas tends to reduce the capacity of the flood plain to convey flood flows. Such reductions in the conveyance capacity of the flood plain tend to increase flood levels.

6.6 FLOOD INSURANCE CONCEPTS

The purpose of the National Flood Insurance Program is to offer affordable flood insurance for homes and businesses located in flood-prone areas. Delineations of flood-prone areas are completed in flood insurance studies commissioned by individual participants (typically cities

and counties) in the program. In these studies, hydrologic studies are completed in order to define peak flow rates along studied streams for 10-year, 50-year, 100-year, and 500-year flood events. Hydraulic analyses are completed in order to establish flood elevations along the studied stream for each of these storm frequencies and to define the boundaries of the regulatory floodway, which is an imaginary zone which results from the assumption that fill encroaches into the flood plain from both sides until the 100-year flood level rises 1.0 foot. Exhibit 6-4 illustrates the basic concept of the floodway and its relationship to the 100-year flood plain.

Flood insurance data for participating cities and counties is published by FEMA in two formats: bound *flood insurance studies*, which describe the results of flooding studies completed for significant streams, and Flood Insurance Rate Maps, which provide data on 100-year flood levels, illustrate the boundaries of the floodway, 100-year flood plain, and 500-year flood plain, and designate flood hazard zones for insurance purposes. Exhibit 6-5 illustrates a portion of a typical FIRM panel. The 100-year and 500-year flood plain boundaries are indicated on the map, as are the boundaries of the regulatory floodway. The irregular lines drawn across the 100-year flood plain at one-foot intervals indicate the locations along the stream at which 100-year flood profiles pass through base flood elevations.

The intent of flood insurance studies is not to indicate with certainty that a particular area will or will not flood over a given period of time. Rather, the purpose of the flood insurance study is to define areas for which there is a certain *likelihood* of flooding. That likelihood is defined by using the 100-year flood as a standard measure. By definition, the 100-year flood is an event for which the probability of occurrence in any given year is 1 percent.

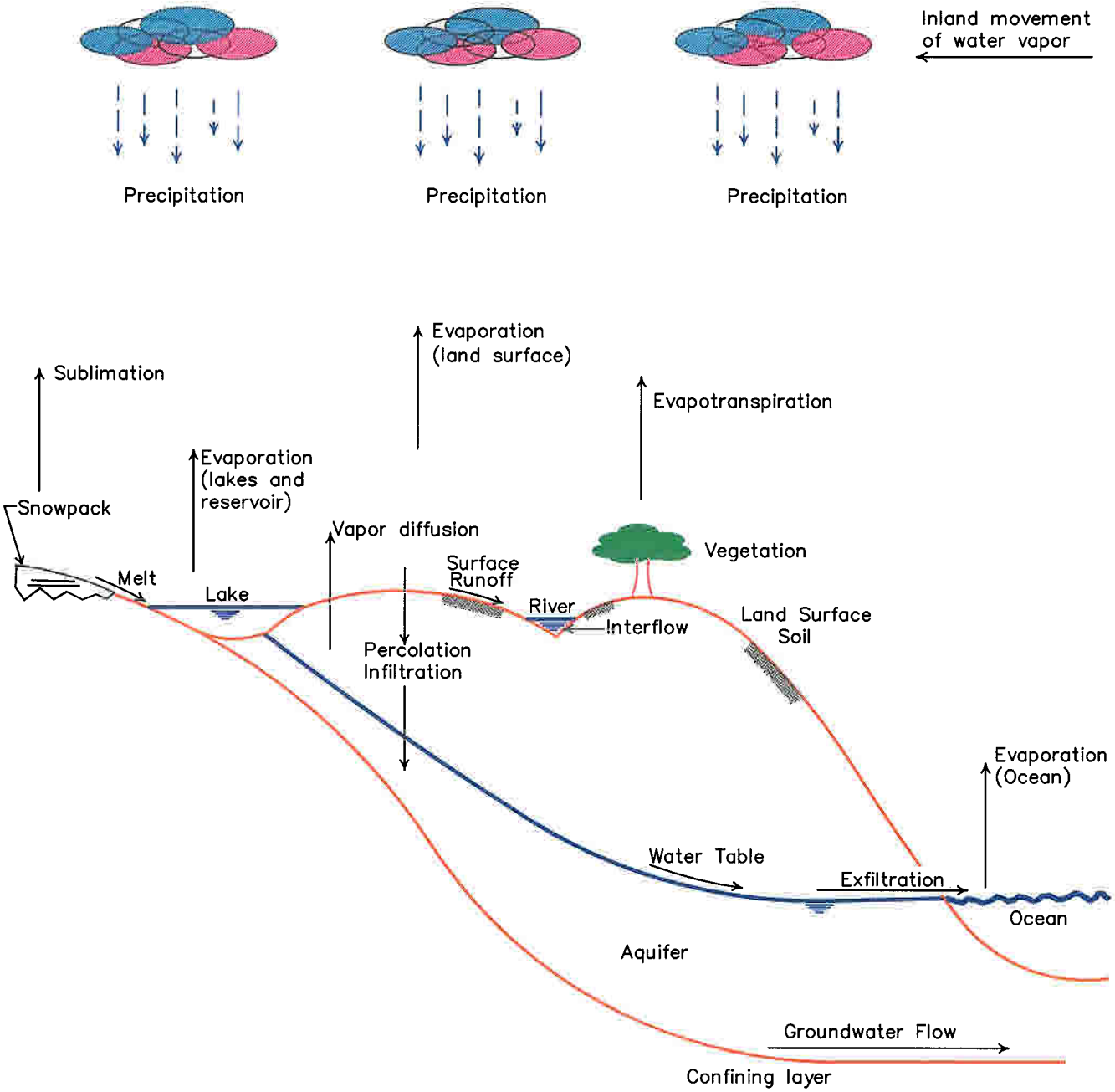

CITY OF LUFKIN
LUFKIN, TEXAS

DESIGN CRITERIA MANUAL

SKETCH OF THE HYDROLOGIC CYCLE

DATE	MARCH 1997	EXHIBIT NO.	6-1

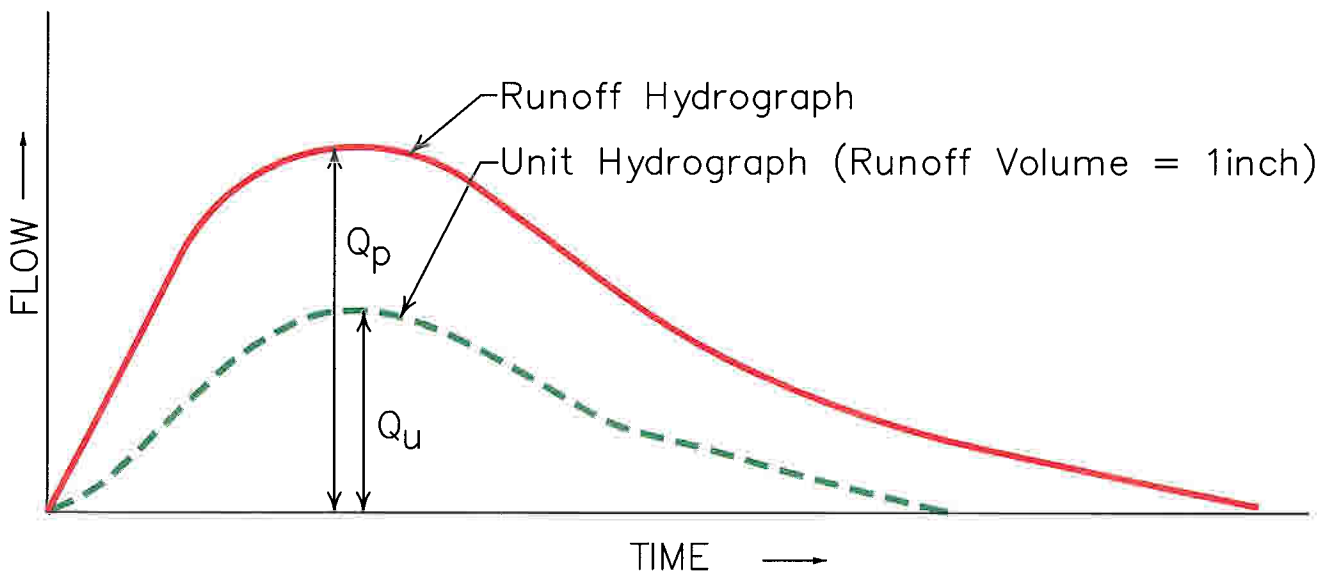

$Q_p = Q_u \times R$

Where: Q_p = Flow rate for runoff hydrograph
Q_u = Flow rate for unit hydrograph
R = Volume of runoff under runoff hydrograph

CITY OF LUFKIN, LUFKIN, TEXAS	DESIGN CRITERIA MANUAL	UNIT AND RUNOFF HYDROGRAPHS	
		DATE MARCH 1997	EXHIBIT NO. 6-2

Manning Equation: Flow Velocity (V) $= \frac{1.49}{n} * S^{1/2} * R^{2/3}$

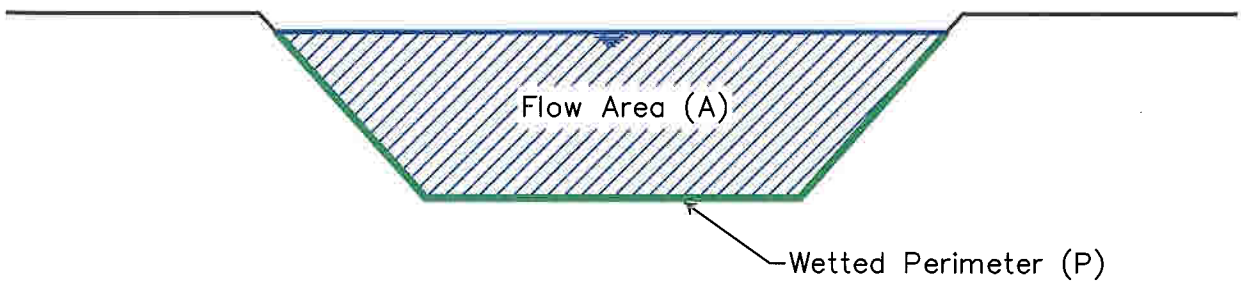

$R = \frac{A}{P}$

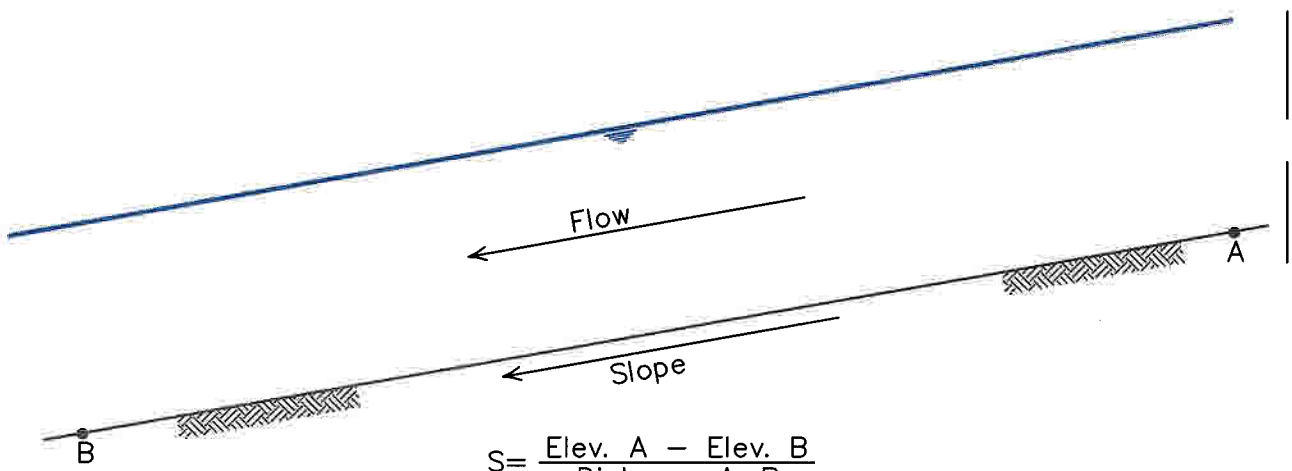

$S = \frac{\text{Elev. A} - \text{Elev. B}}{\text{Distance A–B}}$

CITY OF LUFKIN
LUFKIN, TEXAS

DESIGN CRITERIA MANUAL

CONCEPTS ASSOCIATED WITH THE MANNING EQUATION

DATE	MARCH 1997	EXHIBIT NO.	6-3

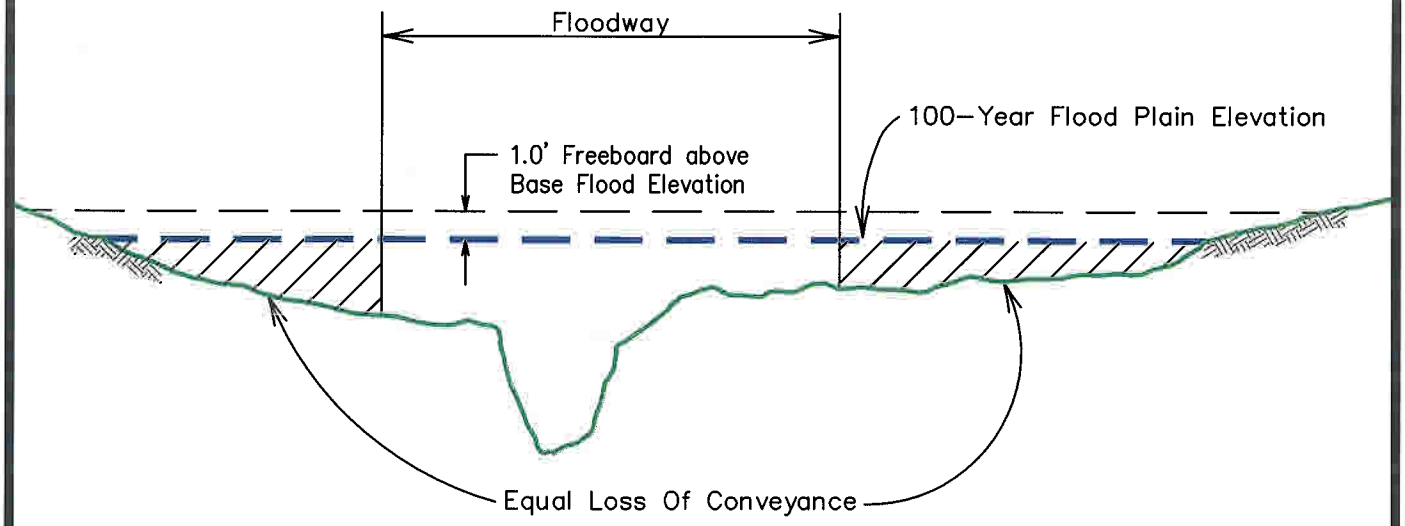

CROSS–SECTION

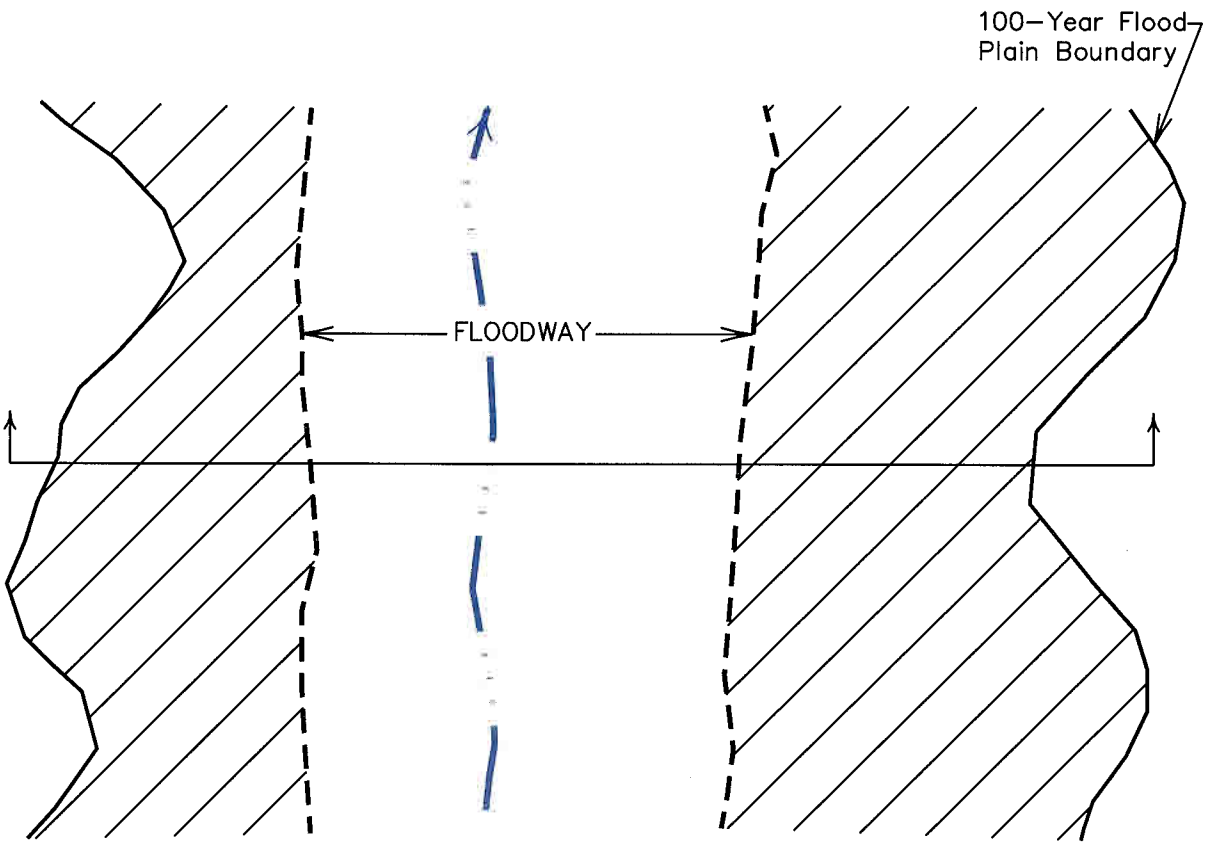

PLAN

CITY OF LUFKIN
LUFKIN, TEXAS

DESIGN CRITERIA MANUAL

RELATIONSHIP BETWEEN THE 100–YEAR FLOODPLAIN AND FLOODWAY

DATE	MARCH 1997	EXHIBIT NO.	6-4

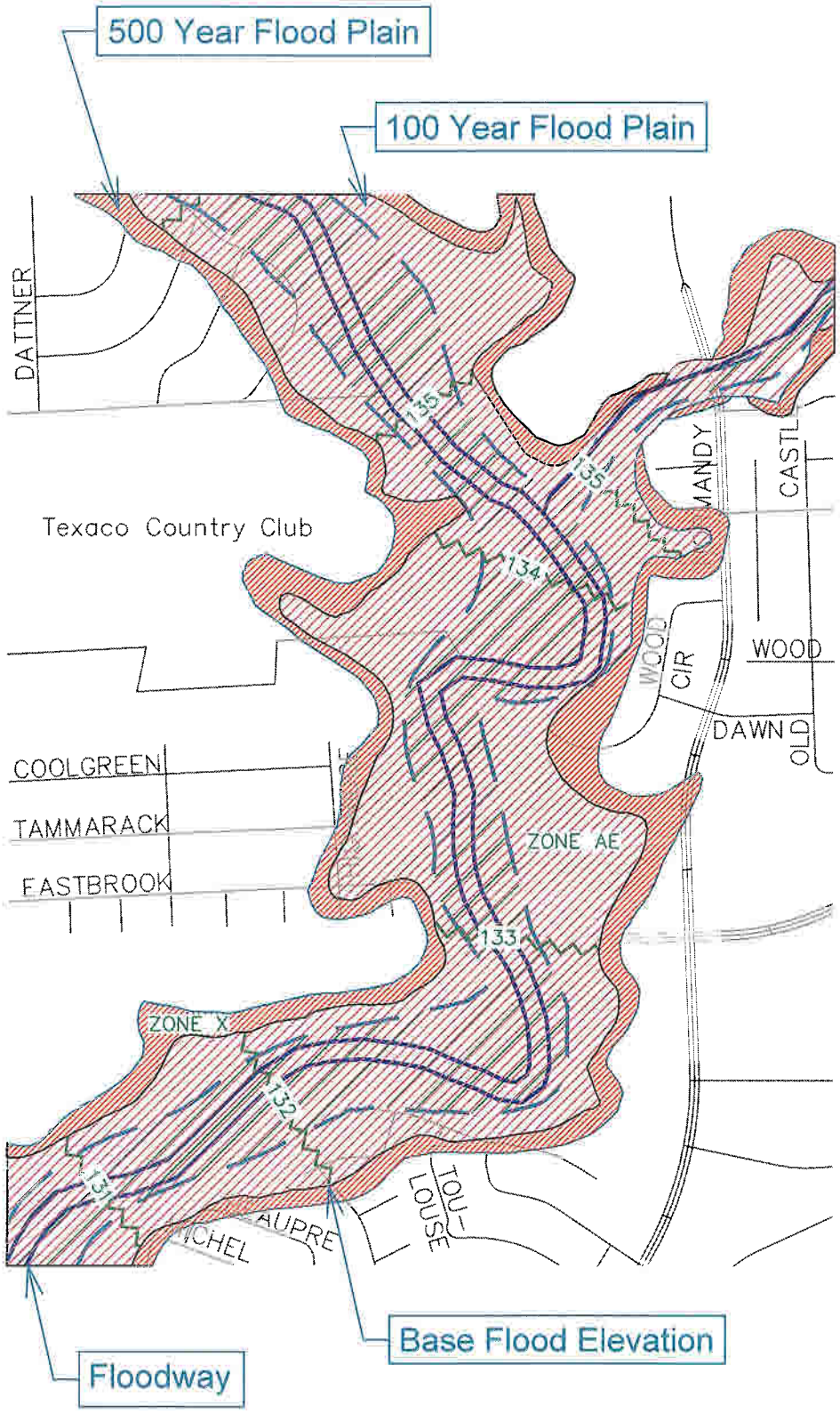

CITY OF LUFKIN
LUFKIN, TEXAS

DESIGN CRITERIA MANUAL

EXPLANATION OF INFORMATION ILLUSTRATED ON FLOOD INSURANCE RATE MAP

DATE	MARCH 1997	EXHIBIT NO.	6-5

7. HYDROLOGIC ANALYSES

7.1 COMPUTING PEAK FLOW RATES FOR DRAINAGE AREAS UP TO 250 ACRES

7.1.1 Introduction

This section describes the use of the Rational Method for computing peak flow rates from watersheds up to 250 acres in size.

7.1.2 The Rational Method

The Rational Method relates the peak rate of runoff from a watershed to drainage area, land use, and rainfall intensity. The basic formula used in the Rational Method to compute peak flow rates is

$$Q = C \times Ca \times I \times A$$

where: Q = the peak runoff rate in cubic feet per second;

C = a runoff coefficient dependent on land use;

Ca = a runoff coefficient adjustment factor dependent on the storm recurrence interval;

I = the rainfall intensity in inches per hour;

A = the drainage area in acres.

Table 7-1 gives the runoff coefficient adjustment factors for storm recurrence intervals from 2 years to 100 years.

TABLE 7-1: RATIONAL METHOD RUNOFF COEFFICIENT ADJUSTMENT FACTORS

Storm Recurrence Interval (years)	Adjustment Factor (Ca)
2 - 10	1.00
25	1.10
50	1.20
100	1.25

7.1.3 Establishing the Drainage Area

Drainage areas for Rational Method analyses should be established using topographic maps, storm sewer layouts, and other available information. At each computation point, the drainage area is defined as the *total* area contributing runoff at that location.

7.1.4 Determining Runoff Coefficients

Table 7-2 provides a summary of runoff coefficients for various land uses, slopes, and soil conditions. The appropriate runoff coefficient may be selected by establishing the land use and consulting this table. For example, an area developed as an apartment complex on land which

slopes at 3% would have a runoff coefficient of 0.80. Land use data may be obtained from zoning maps and aerial photographs, as well as through on-site inspections.

TABLE 7-2: RATIONAL METHOD COEFFICIENTS FOR 2- TO 10-YEAR STORMS

Description of Area	Basin Slope < 1%	Basin Slope 1% - 3.5%	Basin Slope 3.5% to 5.5%
Single-Family Residential Districts			
Lots greater than 1/2 acre	0.30	0.35	0.40
Lots 1/4 to 1/2 acre	0.40	0.45	0.50
Lots less than 1/4 acre	0.50	0.55	0.60
Multi-Family Residential Districts	0.60	0.65	0.70
Apartment Dwelling Areas	0.75	0.80	0.85
Business Districts			
Downtown	0.85	0.87	0.90
Neighborhood	0.75	0.80	0.85
Industrial Districts			
Light	0.50	0.65	0.80
Heavy	0.60	0.75	0.90
Railroad Yard Areas	0.20	0.30	0.40
Cemeteries	0.10	0.18	0.25
Playgrounds	0.20	0.28	0.35
Streets			
Asphalt	0.80	0.80	0.80
Concrete	0.85	0.85	0.85
Concrete Drives and Walks	0.85	0.85	0.85
Roofs	0.85	0.85	0.85
Lawn Areas			
Sandy Soil	0.05	0.08	0.12
Clay Soil	0.15	0.18	0.22
Woodlands			
Sandy Soil	0.15	0.18	0.25
Clay Soil	0.18	0.20	0.30
Pasture			
Sandy Soil	0.25	0.35	0.40
Clay Soil	0.30	0.40	0.50
Cultivated			
Sandy Soil	0.30	0.55	0.70
Clay Soil	0.35	0.60	0.80

For watersheds with varying land uses, composite runoff coefficients may be computed by determining coefficients and areas for each land use. The composite runoff coefficient may then be computed using the following formula:

$$C_w = \sum (C_i \times A_i) / A_T$$

where: C_w = weighted runoff coefficient;

C_i = runoff coefficients for various land uses;

A_i = drainage areas corresponding to values of C_i;

A_T = total drainage area.

7.1.5 Establishing the Time of Concentration

For the Rational Method, the time of concentration is defined as the time required for all portions of the watershed to contribute runoff at the computation point. The time of concentration is measured from the time at which runoff begins to the time at which runoff from the most remote portion of the watershed will reach the computation point. For the purposes of analysis, the time of concentration is assumed to be equal to the time required to flow from the most hydraulically remote portion of the watershed to the computation point. The time of concentration is normally defined by identifying the longest watercourse within the watershed and estimating the time required for runoff to travel the entire length of the watercourse.

Storm runoff may pass through a range of flow conditions as it moves along the longest watercourse. Typically, the first condition encountered is *overland sheet flow*. This type of flow is characterized by very shallow depths (an inch or two at the most). Within a short distance, typically about 100 to 300 feet, storm runoff begins to flow at greater depths and to collect in streets, swales, and small ditches or gullies. Finally, the runoff collects in storm sewers, creeks, and drainage channels in which flow depths may reach several feet. Flow velocities for overland sheet flow and some concentrated flow conditions may be estimated using the Uplands Method developed by the U.S. Department of Agriculture Soil Conservation Service (SCS). The Uplands Method relates flow velocity to slope and land use. Exhibit 7-1 provides a graphical representation of the Uplands Method. For storm sewers, creeks, and channels, flow velocities may be estimated through hydraulic analyses involving the application of the Manning equation.

In order to estimate the time of concentration, the watercourse is divided into reaches which represent the types of flow conditions encountered. For example, the watercourse may include overland sheet flow, concentrated flow in a roadside ditch, and flow in a drainage channel. For each reach, the flow velocity for each individual reach is estimated. The length of each individual reach is divided by the flow velocity to determine the time of travel required for water to pass through the reach. The time of concentration is equal to the sum of the individual times of travel.

7.1.6 Computation of the Rainfall Intensity

The rainfall intensity may be determined from the intensity-duration-frequency curves illustrated on Exhibit 7-2. These curves provide rainfall intensities for 2-year, 5-year, 10-year, 25-year, 50-year, and 100-year storm frequencies. The rainfall intensities used to develop the curves are determined by dividing rainfall depths from U.S. Weather Bureau Technical Paper No. 40 and Hydrometeorological Report No. 35 by corresponding storm durations. For example, the 5-year,

10-minute rainfall depth is 1.03 inches. Dividing 1.03 inches by 10 minutes and multiplying by 60 minutes per hour yields a rainfall intensity of 6.18 inches per hour.

$$I = (1.03 \text{ inches} / 10 \text{ minutes}) \times (60 \text{ minutes} / \text{hour}) = 6.18 \text{ inches} / \text{hour}.$$

Rainfall intensities may also be computed using the equations given in Table 7-3. These equations yield results which match the curves on Exhibit 7-2 within a 2% margin of error.

TABLE 7-3: EQUATIONS FOR COMPUTING RAINFALL INTENSITIES

Storm Frequency	tc <= 60 minutes	tc > 60 minutes
2-Year	$I = 95.2661 / (tc + 17)^{0.869594}$	$I = 62.9589 / (tc + 10)^{0.791611}$
5-Year	$I = 73.2200 / (tc + 15)^{0.768713}$	$I = 80.1794 / (tc + 18)^{0.782634}$
10-Year	$I = 79.4537 / (tc + 16)^{0.757355}$	$I = 92.4527 / (tc + 23)^{0.776544}$
25-Year	$I = 77.5417 / (tc + 15)^{0.718886}$	$I = 101.4980 / (tc + 21)^{0.767561}$
50-Year	$I = 85.9764 / (tc + 16)^{0.716003}$	$I = 103.5325 / (tc + 18)^{0.754384}$
100-Year	$I = 83.0896 / (tc + 15)^{0.688595}$	$I = 117.4033 / (tc + 21)^{0.755202}$

7.1.7 Computing Peak Flow Rates

Given the runoff coefficient, the runoff coefficient adjustment factor, the rainfall intensity, and the drainage area, peak flow rates are easily computed using the basic Rational Method equation as follows:

$$Q = C \times Ca \times I \times A.$$

7.1.8 Analyzing a Watershed with Multiple Sub-Areas or Computation Points

When analyzing a watershed with multiple sub-areas or computation points, the peak flow rate for the most upstream computation is computed first. Peak flow rates are computed at subsequent points, always moving in the downstream direction. At each point, the total drainage area is determined and the time of concentration is computed for the longest watercourse stretching from the most remote point in the entire watershed to the current computation point. The rainfall intensity for the peak flow rate computation is computed using this time of concentration. A weighted runoff coefficient may be computed using the coefficients for individual sub-areas upstream of the computation point.

7.2 HYDROLOGIC ANALYSES FOR DRAINAGE AREAS OF 250 ACRES AND MORE

This section describes methods to be used in hydrologic analyses of watersheds covering more than 250 acres. These analyses should be completed using the HEC-1 Flood Hydrograph Package computer program developed at the Hydrologic Engineering Center of the U.S. Army Corps of Engineers.

7.2.1 Watershed and Sub-Watershed Boundaries

Watershed and sub-area boundaries should be established using the best available topographic maps. The number of sub-areas required for the analysis is a function of the number of

computation points, which should typically be established at confluence's with tributary streams and at roadways or other points of interest at which computed runoff hydrographs are desired.

7.2.2 Rainfall Data

Rainfall depth-duration-frequency data for watershed analyses are taken from U.S. Weather Bureau Technical Paper No. 40 and Hydrometeorological Report No. 35. These data are presented in Table 7-5. For HEC-1 applications, rainfall data from Table 7-5 are entered on a PH record included in the first runoff hydrograph computation for the watershed. The HEC-1 program automatically distributes the rainfall over a 24-hour period in such a manner that the maximum rainfall intensity occurs in the middle of the storm event. Rainfall leading up to and following the period of maximum intensity is distributed in a manner which produces a balanced rainfall distribution. Exhibit 7-4 illustrates the shape of the resulting rainfall distribution.

TABLE 7-5: DESIGN RAINFALL DATA FOR LUFKIN, TEXAS

	Rainfall Depth (inches) for Given Duration							
Recurrence Interval (years)	5 minute	15 minute	60 minute	2 hour	3 hour	6 hour	12 hour	24 hour
2	0.54	1.16	2.18	2.67	2.94	3.48	4.15	4.75
3	0.58	1.25	2.41	3.05	3.39	4.00	4.82	5.60
5	0.61	1.33	2.65	3.45	3.82	4.54	5.50	6.43
10	0.66	1.46	2.99	3.98	4.41	5.39	6.55	7.73
25	0.75	1.65	3.48	4.55	5.12	6.33	7.69	9.07
50	0.81	1.81	3.87	5.09	5.67	7.05	8.70	10.20
100	0.88	1.96	4.25	5.67	6.34	8.00	9.77	11.48

Sources: *USWB Technical Paper No. 40* and *NWS Hydrometeorological Report No. 35*

7.2.3 Infiltration Losses

Infiltration losses will be accounted for using the SCS Curve Number method. This is an empirical method developed by the Soil Conservation Service of the U.S. Department of Agriculture. The following relationships are used to compute the total runoff for a given total rainfall. In HEC-1 applications, cumulative totals for rainfall and infiltration are maintained. The total runoff is re-computed for every time step.

$$Q = (P - 0.2S)^2 / (P + 0.8S)$$

$$S = (1000/CN) - 10$$

where: Q = the total runoff in inches;

P = total rainfall in inches;

S = the amount of rainfall which totally infiltrates before runoff begins, in inches;

CN = the SCS curve number.

The Curve Number is a function of soil structure and land use. Soil structure is defined by assigning individual soils to one of four hydrologic soil groups. These groups, designated A through D, represent a wide range of soil porosity. Soils belonging to hydrologic soil group A are the most porous, while soils in group D are the least porous. The hydrologic soil group to which a particular soil belongs may be determined by consulting the Soil Survey for Angelina County, Texas. Table 7-6 provides a summary of SCS curve numbers for various land uses.

TABLE 7-6: SCS CURVE NUMBERS

		Hydrologic Soil Group			
Land Use Description		A	B	C	D
Cultivated Land					
Without Conservation Treatment		72	81	88	91
With Conservation Treatment		62	71	78	81
Pasture or Range Land					
Poor Condition		68	79	86	89
Good Condition		39	61	74	80
Meadow: Good Condition		30	58	71	78
Wood or Forest Land					
Thin Stand, Poor Cover, No Mulch		45	66	77	83
Good Cover		25	55	70	77
Open Spaces, Lawns, Parks, Cemeteries					
Good Condition, 75% Grass Cover		39	61	74	80
Poor Condition, 50-75% Grass Cover		49	69	79	84
Commercial and Business Areas (85% Impervious)		89	92	94	95
Industrial Districts (72% Impervious)		81	88	91	93
Residential					
Average Lot Size	*Average % Impervious*				
1/8 acre or less	*65*	77	85	90	92
1/4 acre	*38*	61	75	83	87
1/3 acre	*30*	57	72	81	86
1/2 acre	*25*	54	70	80	85
1 acre	*20*	51	68	79	84
Paved Parking Lots, Roofs, Driveways, Etc.		98	98	98	98
Streets and Roads					
Paved with Curbs and Storm Sewers		98	98	98	98
Gravel		76	85	89	91
Dirt		72	82	87	89

Source: *SCS National Engineering Handbook, Section 4*

For watersheds with varying land uses and soil types, composite curve numbers may be computed by determining the curve number and drainage area associated with each land use and/or soil category. The composite curve number may then be computed using the following formula:

$$CN_w = \sum (CN_i \times A_i) / A_T$$

where: CN_w = weighted curve number;

CN_i = curve numbers for various land uses and soil types;

A_i = drainage areas corresponding to values of CN_i;

A_T = total drainage area.

Two approaches may be used in establishing an SCS curve number to represent a particular watershed. For the first approach, the selected curve number accounts for impervious cover. For example, Table 7-6 indicates that the appropriate curve number for an industrial district with soils belonging to hydrologic soil group C is 91. This curve number accounts for approximately 72 percent of impervious cover. The second approach involves the selection of a curve number for pervious areas and accounting for the percent impervious cover as a separate parameter. When entering SCS loss function data in the HEC-1 program, the curve number and impervious cover are entered in fields 2 and 3, respectively, of an LS record. For an industrial area with 72% of impervious cover, a healthy grass cover on at least 75% of all pervious areas, and soils belonging to hydrologic group C, correct and incorrect input data are illustrated below:

Field:	*1*	*2*	*3*	
LS	**(blank)**	**91**	**0**	(Correct - Impervious Cover Accounted for in Curve Number)
LS	**(blank)**	**74**	**72**	(Correct - Curve No. for Pervious Areas Plus Percent Impervious)
LS	**(blank)**	**91**	**72**	(Incorrect - Impervious Cover Accounted for Twice)

7.2.4 Unit Hydrograph Methodology

Unit hydrographs will be based on the Clark Unit Hydrograph method, which is one of the unit hydrograph methods available in the HEC-1 program. The Clark Unit Hydrograph method uses three parameters to define a unit hydrograph for a watershed: the time of concentration, a storage coefficient, and a time-area curve.

The *time of concentration* (TC) is the time required for storm runoff to flow from the most remote point in the watershed to the watershed outlet.

The *storage coefficient* (R) is an indicator of the available storm water storage volume within a watershed. Such storage may be provided in depressions, ponds, or in the channel and flood plain of the watershed under consideration. The value of the storage coefficient varies directly with the relative amount of storage volume within a watershed, i.e., the greater the storage volume, the higher the storage coefficient.

The *time-area curve* relates the percentage of the watershed contributing runoff at the analysis point to the fraction of the time of concentration which has elapsed since the beginning of runoff. The entire watershed is considered to be contributing runoff at the outlet when the elapsed time is equal to or greater than the time of concentration. HEC-1 offers a standard time-area curve based on an assumed watershed shape. This standard curve may be used in most HEC-1 analyses as long as extremes in watershed shapes (i.e., very large or very small ratios of watershed length to width) are avoided.

The time of concentration may be determined using the methods adopted for the Rational Method. The watercourse is divided into reaches which represent the types of flow conditions encountered. For each reach, the flow velocity for each individual reach is estimated. Flow velocities for overland sheet flow and some concentrated flow conditions may be estimated using the SCS Uplands Method. For storm sewers, creeks, and channels, flow velocities may be estimated through hydraulic analyses involving the application of the Manning equation. The length of each individual reach is divided by the flow velocity to determine the time of travel required for water to pass through the reach. The time of concentration is equal to the sum of the individual times of travel.

The relationship between the time of concentration and storage coefficient is typically regional in nature and may be expressed as follows:

$$K = R / (TC + R)$$

where: K = value of regional storage ratio;

R = the storage coefficient for Clark's unit hydrograph method, in hours;

TC = the time of concentration, in hours.

For the Lufkin area, it is recommended that K be set equal to 0.67. This makes the storage coefficient equal to 3.0 times the time of concentration. Therefore, the storage coefficient is determined by simply multiplying the time of concentration by 2.0.

7.2.5 Computation of Runoff Hydrographs

Computation of runoff hydrographs is accomplished using the HEC-1 program and a brief set of data input records. These records include the following:

KK - enter an alphanumeric designation for the hydrograph in field 1;

BA - enter the drainage area in field 1;

PH - enter the percent probability associated with the storm in field 1 and rainfall data for 5-minute, 15-minute, 60-minute, 2-hour, 3-hour, 6-hour, 12-hour, and 24-hour durations in fields 3 through 10;

LS - enter the SCS curve number in field 2 and, if needed, the percent impervious cover in field 2;

UC - enter the time of concentration in field 1 and the storage coefficient in field 2.

A typical set of HEC-1 data input records for the computation of a runoff hydrograph would be as follows.

```
KK   SUB1
BA   0.57
PH   1          0.88  1.96  4.25  5.67  6.34  8.00  9.77  11.48
LS        74    40
UC   1.03 2.06
```

This hydrograph is for a watershed of 0.57 square miles. The storm probability is 1%, which means that this is a 100-year storm event. Rainfall depths range from 0.88 inches for a 5-minute duration to 11.48 inches for a 24-hour duration. The SCS curve number for pervious areas is 74, while the impervious cover is 40 percent. The time of concentration is 1.03 hours and the storage coefficient is 2.06 hours.

7.2.6 Streamflow Routing

Streamflow routing is the process by which the effects of travel time and storage on runoff hydrographs are taken into account as flood flows move from one analysis point to another. The HEC-1 program offers a number of streamflow routing methods. Two of these are recommended for use in the City of Lufkin. For cases in which flood flows are confined to the banks of a channel or to an enclosed channel or storm sewer and there is no backwater from receiving streams, hydraulic structures, or roadway crossing structures, the Muskingum-Cunge method may be applied. This mathematical routing method provides an implicit accounting of storage within the channel. HEC-1 modeling input for the Muskingum-Cunge method includes a number of physical parameters, including the length and slope of the routing reach, the Manning roughness coefficient, the shape of the channel (trapezoidal, circular, or deep rectangular), the bottom width or diameter, and the side slope ratio.

For conditions in which backwater conditions and/or overbank flooding is anticipated, the Modified Puls routing method is recommended. This method explicitly accounts for the effects of storage volume within the flood plain. The Modified Puls method is based on a simple continuity equation:

$$\Delta S = I - O$$

where: ΔS = change in storage volume within the routing reach;

I = inflow to the routing reach;

O = outflow from the routing reach.

For the Modified Puls method, input to the HEC-1 program consists of a set of flow rates and corresponding storage volumes which are input to the program on SQ and SV records, respectively. A third record, the RS, is used to specify the initial storage condition in the routing reach and to define the number of routing steps, which is generally set equal to the number of HEC-1 computation time intervals required for storm water to flow from the upstream end of the routing reach to the downstream end.

7.2.7 Combining Hydrographs

When analyzing watersheds that have been divided into two or more sub-areas, it is necessary to combine runoff hydrographs from the individual sub-areas. Combining the hydrographs yields a single hydrograph which accounts for all runoff from the individual sub-areas. With the HEC-1 program, this is accomplished through the use of the HC record. To combine two hydrographs, the following data sequence is entered.

```
KK    COMB
HC       2
```

Field 1 of the KK record contains a user-defined alphanumeric designation for the combined hydrographs. Field 1 of the HC record tells the HEC-1 program how many hydrographs to combine. The program keeps up with hydrographs through the use of a "stack" upon which hydrographs are placed after being computed, routed, or combined. The hydrograph stack works on a "last on, first off" basis. In other words, the last hydrograph placed on the stack is the first hydrograph taken off the stack when the HEC-1 program is instructed to route a hydrograph or combine one hydrograph with another. A hydrograph taken off the stack for routing or combination is removed from the stack and replaced with the routed or combined hydrograph. Exhibit 7-5 is a map of the Cedar Creek watershed divided into sub-areas for HEC-1 modeling. Exhibit 7-6 is a schematic of the steps included in the HEC-1 model of the watershed. Exhibit 7-7 illustrates hydrograph stack manipulations for the Cedar Creek HEC-1 analysis.

7.2.8 Analyses of Watersheds With Multiple Sub-Areas

Hydrologic analyses of watersheds with multiple sub-areas may be accomplished with the HEC-1 program using three major hydrograph operations: compute, route, and combine. Data for each sub-area and routing reach are developed separately, then assembled into a HEC-1 input data file which represents the entire watershed. The trick is to set up the HEC-1 input data file in such a way as to have the program complete these operations in the appropriate order. A thorough understanding of HEC-1 hydrograph stack operations is crucial to the successful development of models which correctly represent the structure of complex watersheds. With this in mind, the following steps are recommended in developing HEC-1 modeling data for watersheds with multiple sub-areas.

1. Establish the overall watershed boundary using available topographic maps, aerial photographs, etc.
2. Identify all locations at which runoff hydrographs are to be computed. These analysis points normally include confluence's with major tributaries, roadway crossings at which peak flow rates or other runoff data are desired, lakes and reservoirs, etc.
3. Establish sub-area boundaries. Normally, there is one sub-area above the first analysis point and one between each pair of successive analysis points. In addition, there is at least one sub-area for each major tributary. The resulting map will be similar to that shown on Exhibit 7-5.
4. Construct a simple flow diagram which illustrates the basic structure of the watershed and accounts for all hydrograph computations, routing steps, and combinations. Exhibit 7-6 provides an example.
5. Test the flow diagram using HEC-1 hydrograph stack principles to make sure that all hydrograph operations are completed in the correct order.
6. Use the flow diagram to establish the HEC-1 input data file.

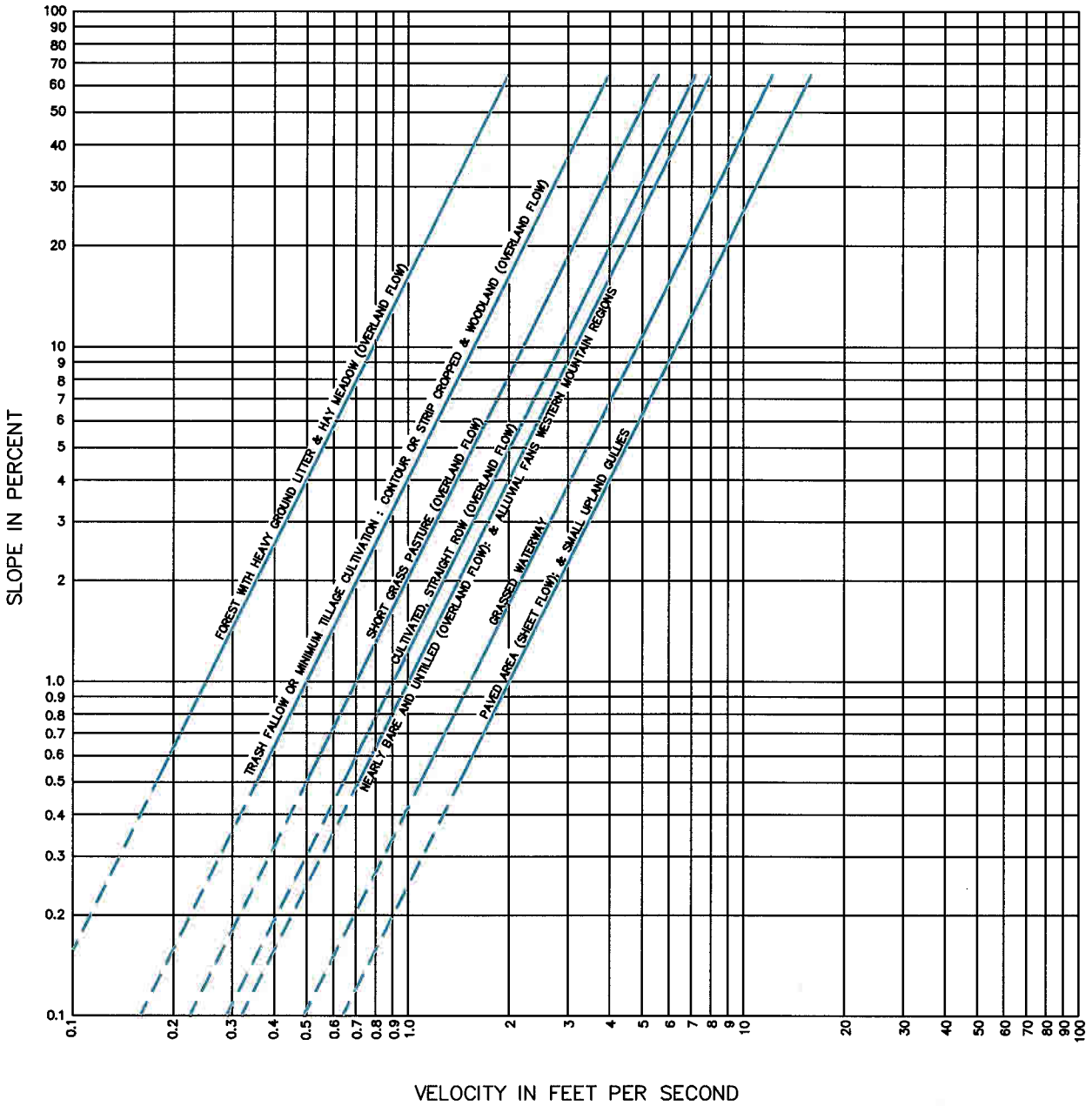

CITY OF LUFKIN
LUFKIN, TEXAS

DESIGN CRITERIA MANUAL

SCS UPLANDS METHOD

DATE	MARCH 1997	EXHIBIT NO.	7-1

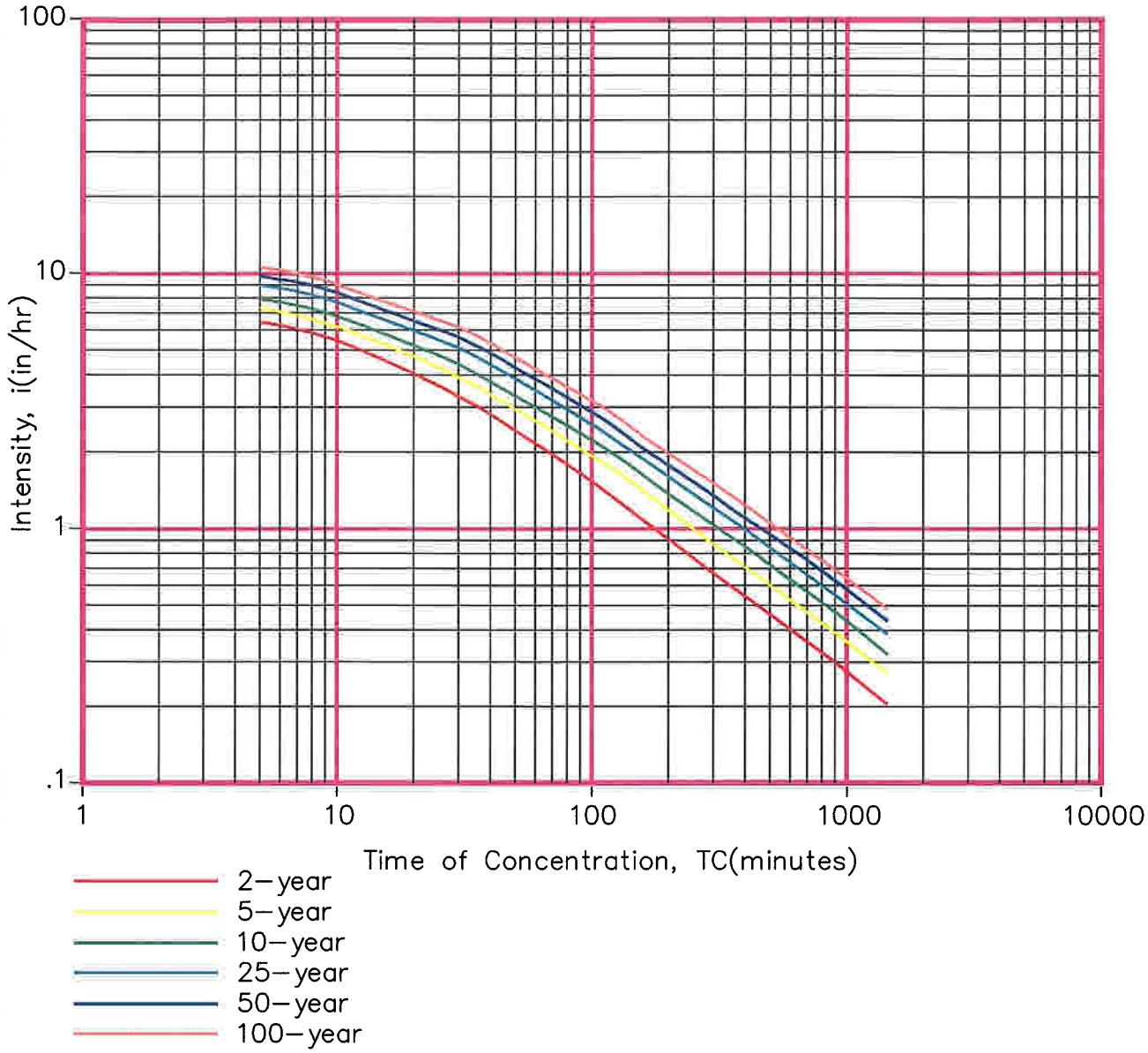

EQUATIONS FOR COMPUTING RAINFALL INTENSITIES		
Storm Frequency	tc <= 60 minutes	tc > 60 minutes
2-Year	$I=95.2661/(tc+17)^{0.869594}$	$I=62.9589/(tc+17)^{0.791611}$
5-Year	$I=73.2200/(tc+15)^{0.768713}$	$I=80.1794/(tc+15)^{0.782634}$
10-Year	$I=79.4537/(tc+16)^{0.757355}$	$I=92.4527/(tc+16)^{0.776544}$
25-Year	$I=77.5417/(tc+15)^{0.718886}$	$I=101.4980/(tc+15)^{0.767561}$
50-Year	$I=85.9764/(tc+16)^{0.716003}$	$I=103.5325/(tc+16)^{0.754384}$
100-Year	$I=83.0896/(tc+15)^{0.688595}$	$I=117.4033/(tc+15)^{0.755202}$

CITY OF LUFKIN
LUFKIN, TEXAS

DESIGN CRITERIA MANUAL

RAINFALL INTENSITY FOR A GIVEN STORM DURATION IN In./Hr.

DATE MARCH 1997

EXHIBIT NO. 7-2

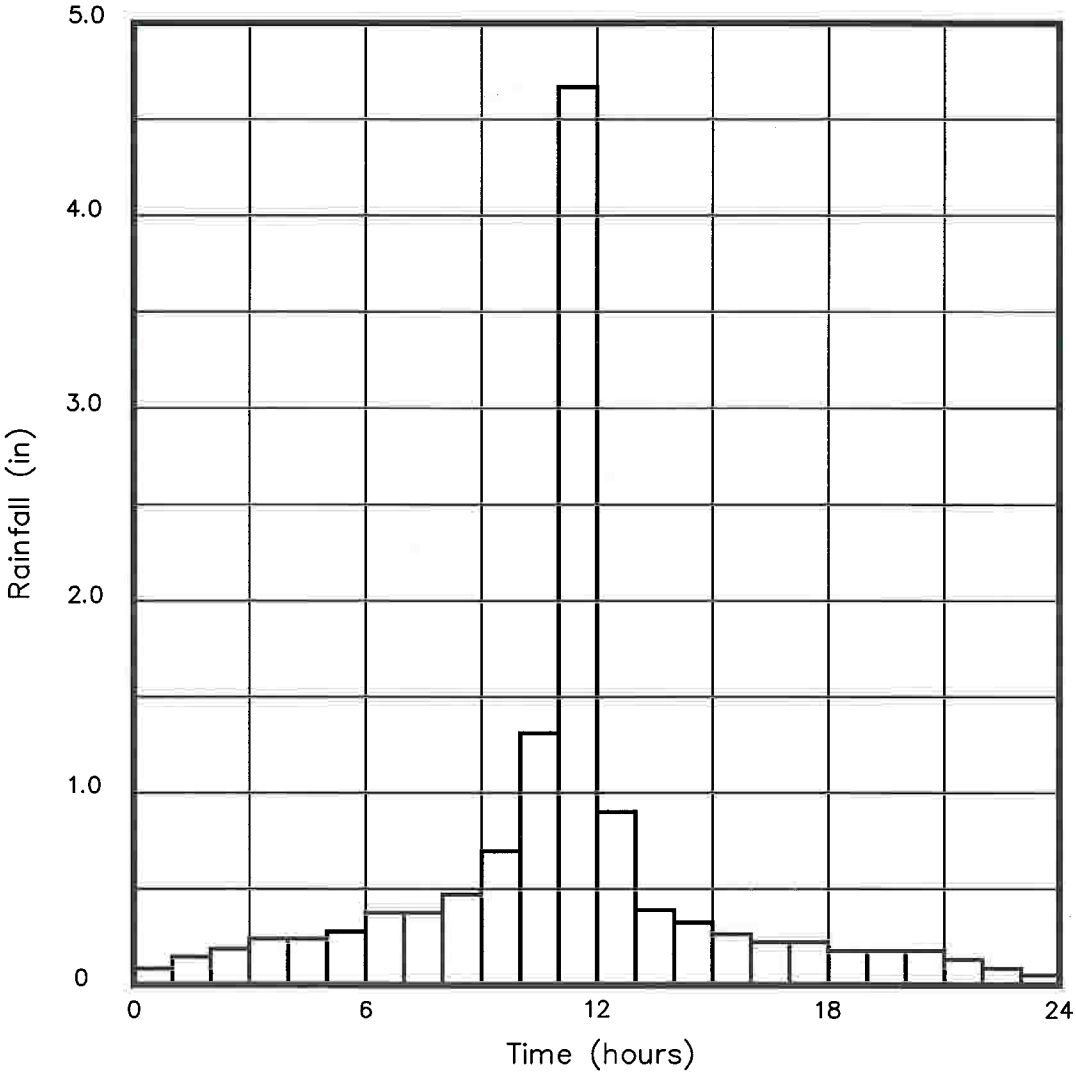

CITY OF LUFKIN
LUFKIN, TEXAS

DESIGN CRITERIA MANUAL

24-HOUR, 100-YEAR HYETOGRAPH IN ONE HOUR INCREMENTS

DATE	MARCH 1997	EXHIBIT NO.	7-3

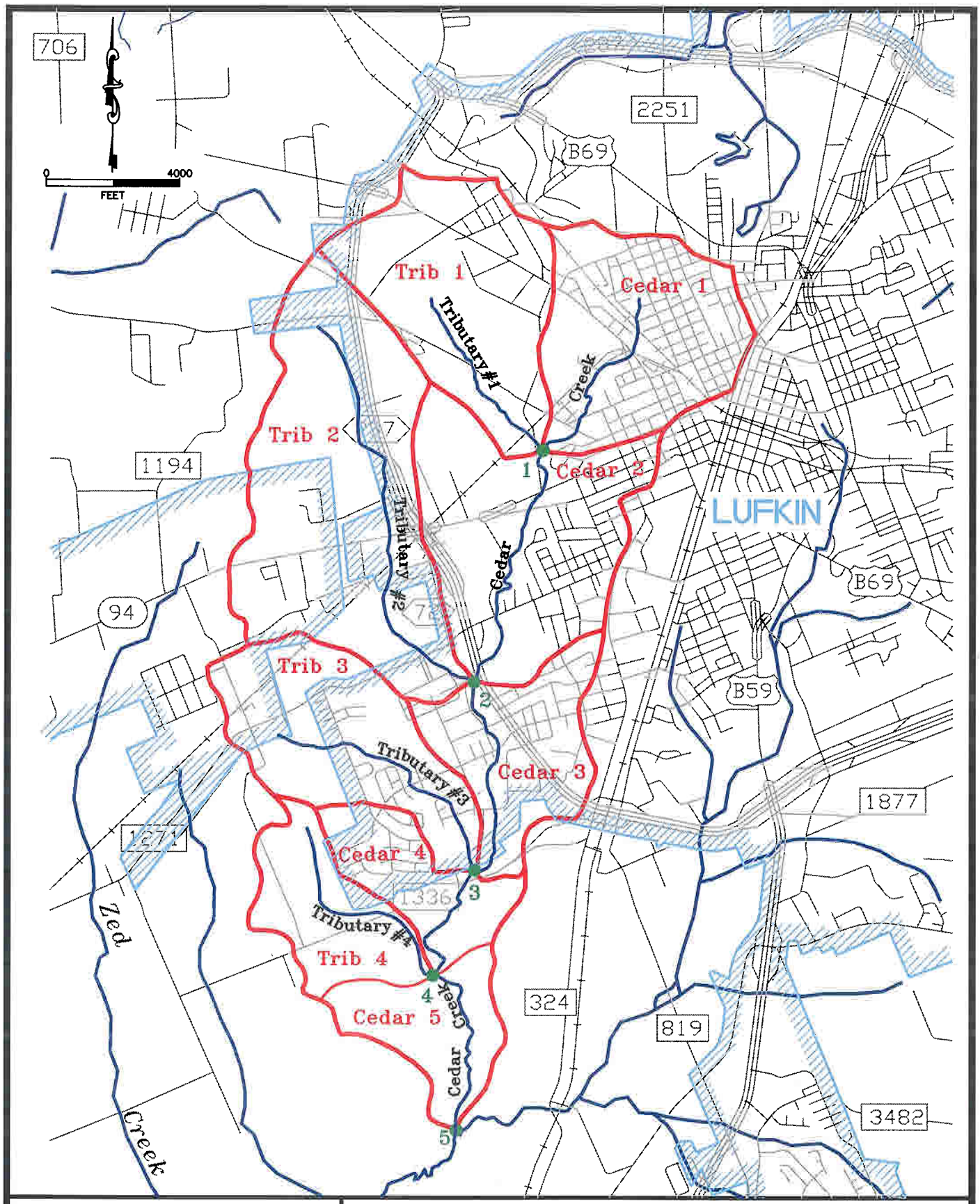

CITY OF LUFKIN
LUFKIN, TEXAS

DESIGN CRITERIA MANUAL

CEDAR CREEKWATERSHED MAP

DATE	MARCH 1997	EXHIBIT NO.	7-4

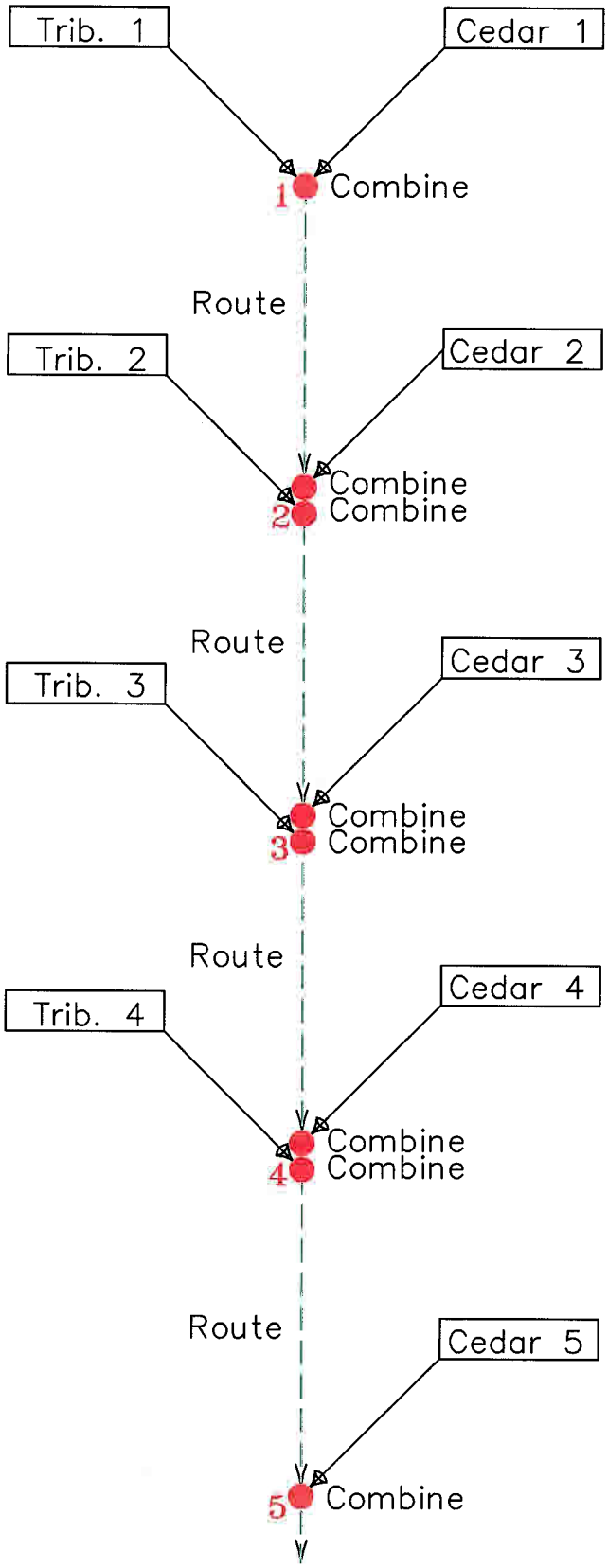

CITY OF LUFKIN
LUFKIN, TEXAS

DESIGN CRITERIA MANUAL

HEC-1 MODELING SCHEMATIC FOR THE CEDAR CREEK WATERSHED

DATE	MARCH 1997	EXHIBIT NO.	7-5

OPERATIONS	STACK
1. Compute CEDAR 1	CEDAR 1
2. Compute TRIB 1	TRIB. 1 CEDAR 1
3. Combine at 1	Comb. 1
4. Route to 2	Route 2
5. Compute CEDAR 2	CEDAR 2 Route to 2
6. Combine at 2	Comb. at 2
7. Compute TRIB 2	TRIB. 2 Comb. at 2
8. Combine at 2	Comb. at 2
9. Route to 3	Route to 3
10. Compute CEDAR 3	CEDAR 3 Route to 3
11. Combine to 3	Comb. at 3
12. Compute TRIB 3	TRIB. 3 Comb. at 3
13. Combine at 3	Comb. at 3
14. Route to 4	Route to 4
15. Compute CEDAR 4	CEDAR 4 Route to 4
16. Combine at 4	Comb. at 4
17. Compute TRIB 4	TRIB. 4 Comb. at 4
18. Combine at 4	Comb. at 4
19. Route to 5	Route to 5
20. Compute CEDAR 5	CEDAR 5 Route to 5
21. Combine at 5	Comb. at 5

CITY OF LUFKIN
LUFKIN, TEXAS

DESIGN CRITERIA MANUAL

HEC-1 HYDROGRAPH STACK OPERATIONS FOR THE CEDAR CREEK WATERSHED

DATE MARCH 1997

EXHIBIT NO. 7-6

8. DESIGN OF DETENTION FACILITIES

8.1 GENERAL DESIGN REQUIREMENTS

8.1.1 Design Storm Frequencies

The following guidelines must be followed in the design of storm water detention facilities.

- Storm water detention basins serving watershed areas less than 100 acres should be designed to provide sufficient storage volume to mitigate impacts on peak flow rates from a 25-year, 24-hour storm event with a minimum freeboard of 1.0 foot. Basin design may be based on a simple triangular hydrograph approach.
- Storm water detention basins serving watershed areas greater than 100 acres but less than 250 acres should be designed to provide sufficient storage volume to mitigate impacts on peak flow rates from a 50-year, 24-hour storm event with a minimum freeboard of 1.0 foot. Basin design may be based on a manual storage routing analysis or a similar analysis completed using an accepted detention design/analysis computer program.
- Storm water detention basins serving watershed areas greater 250 acres should be designed to provide sufficient storage volume to mitigate impacts on peak flow rates from a 100-year, 24-hour storm event with a minimum freeboard of 1.0 foot. Basin design will be based on a detailed storage routing analysis using the HEC-1 computer program and the latest model of the watershed in which the facility is to be located.
- Discharge structures for all detention facilities shall be designed to pass the runoff from a 100-year, 24-hour storm event without overtopping the banks of the basin.
- All basins should be designed so that overflows occurring during extreme storm conditions (> 100-year) will be directed to the nearest drainage channel without flooding homes and businesses. Overflow depths up to 1 foot above basin bank elevations should be considered.
- Parking lot storage is acceptable as long as the maximum ponding depth does not exceed 6 inches.

8.1.2 Detention Basin Location and Geometry

Detention basins should typically be located in areas in which ground elevations are lower than those in the area proposed to drain to the facilities. Wherever possible, detention facilities should be located immediately adjacent to the stream into which they will discharge storm runoff.

Exhibit 8-1 illustrates the basic geometry of a typical detention facility. Side slopes of detention basins should be no steeper than 3 horizontal to 1 vertical. The transverse slope of the channel bottom should be 1% or steeper. A concrete pilot channel 12 feet in width should be provided in the bottom of the basin as indicated on Exhibit 8-2, which illustrates a typical basin cross-section. The pilot channel should be 6 inches deep. The minimum slope for concrete pilot channels shall be 0.10%. Earthen pilot channels with a minimum depth of 2 feet may be substituted for concrete pilot channels. The minimum flow-line slope for earthen pilot channels

shall be 0.20%. Side slopes of earthen pilot channels shall be no steeper than 3 horizontal to 1 vertical.

8.1.3 Right-of-Way

A minimum 30-foot maintenance berm shall be provided on all sides of the detention basin. For basins located immediately adjacent to a drainage channel with a dedicated right-of-way and a maintenance berm wide enough to satisfy channel design criteria, the width of the detention basin maintenance berm adjacent to the channel may be reduced from 30 feet to 15 feet. In no case, however, shall the total width of the channel and detention basin maintenance berms be less than 30 feet.

8.1.4 Maintenance

All detention facilities shall be located in readily accessible areas. Wherever possible, two access routes should be provided. Maintenance activities, including mowing, slope repairs, removal of accumulated sediments, and repairs to discharge structures, shall be completed on a regular basis. A schedule for maintenance activities should be prepared in connection with the detention design and maintained by the agency or entity responsible for the maintenance of the detention facility. The City of Lufkin will not be responsible for the maintenance of detention facilities designed and constructed to serve individual developments or infrastructure improvement projects. The City will maintain only those regional detention facilities which are called for in Master Drainage Plans prepared for watersheds which contain incorporated areas of the City of Lufkin.

8.1.5 Pump Facilities

Detention facilities which rely on pumps to discharge all or part of the storm water which flows into them are generally not recommended. For facilities where pumps are required, the pump facilities should possess sufficient discharge capacity to accommodate the design 100-year peak discharge rate with the largest pump out of service.

8.1.6 Multi-Purpose Design

Multi-purpose design of storm water detention facilities will be allowed as long as the basic function and maintainability of the facilities are not compromised. Recommended multi-purpose features include permanent ponds, wetlands, playgrounds, and hiking or biking trails.

8.2 PEAK INFLOW RATE AND INFLOW HYDROGRAPH

For detention basins with drainage areas less than 100 acres, the design peak inflow rate may be computed using the Rational method. No detailed inflow hydrograph computation is required for these facilities.

For detention basins with drainage areas greater than 100 acres but less than 250 acres, a detailed inflow hydrograph must be computed.. The HEC-1 computer program may be used in accordance with the methods described in Section 7 of this manual, or some other generally accepted methodology may be used.

For basins with drainage areas greater than 250 acres, the HEC-1 computer program should be used to compute detention basin inflow hydrographs. The methods outlined in Section 7 of this manual should be used to develop the required HEC-1 input data.

8.3 INFLOW VOLUME

The detention basin inflow volume may be computed using the SCS Curve Number method as described in Section 7. For facilities with drainage areas greater than 250 acres, the HEC-1 computer program will automatically determine the basin inflow volume as the area under the computed inflow hydrograph.

8.4 ALLOWABLE PEAK DISCHARGE RATE

The allowable discharge rate for detention facilities shall be determined as the undeveloped conditions peak flow rate for the detention basin drainage area. For basins with drainage areas less than 250 acres, this flow rate may be determined using the Rational Method. For basins with larger drainage areas, the HEC-1 computer program shall be used to compute the undeveloped peak flow rate for the detention watershed.

8.5 DETERMINING THE DETENTION STORAGE VOLUME REQUIREMENT

For detention basins with drainage areas less than 100 acres, the detention storage volume requirement may be determined using the following relationships:

$$B = (43560V_R)/(0.5Q_I)$$

$$V_S = 0.5B(Q_I - Q_O)/43560$$

where: V_S = the estimated storage requirement, in acre-feet;

V_R = the detention inflow volume, in acre-feet;

Q_I = the peak inflow rate, in cfs;

Q_O = the allowable peak discharge rate, in cfs.

These relationships compute the required detention storage volume as the area between triangular inflow and outflow hydrographs for the basin. Exhibit 8-3 illustrates this concept. As indicated on the exhibit, B is the time base of the triangular inflow hydrograph. The discharge hydrograph is assumed to intersect the receding limb of the inflow hydrograph at a flow rate equal to the allowable peak discharge from the detention facility.

This method may also be used for preliminary estimates of detention storage requirements for basins with drainage areas greater than 100 acres. More detailed estimates may be developed for these basins by computing pre-project and post-project conditions runoff hydrographs using the HEC-1 program or other accepted methodology, then superimposing the two hydrographs and measuring the area between them. Exhibit 8-4 illustrates this concept.

8.6 DESIGN OF DETENTION OUTLET STRUCTURES

Primary detention outlet structures should be designed to carry peak design discharges from detention facilities. The design peak discharge for a particular basin may be based on a 25-year, 50-year, or 100-year storm frequency, depending upon the size of the detention drainage area. In order to size a detention structure, the water surface elevation in the basin should be assumed to be equal to its maximum design value. The elevation in the receiving stream should be set equal to the corresponding water surface elevation (25-year, 50-year, or 100-year) in the receiving stream. Standard hydraulic methods may be used to determine the required dimensions of primary outlet structures, which may include culverts, weirs, orifice openings, etc.

For detention basins with drainage areas less than 250 acres, an additional overflow structure must be provided so that the basin can accommodate the runoff from a 100-year, 24-hour storm event without overtopping the banks of the basin.

8.7 DETENTION ROUTING ANALYSIS

No detention routing analysis is required for detention basins with drainage areas of less than 100 acres. The triangular hydrograph calculations described in Section 8.5 may be used to establish the required detention storage volume.

For facilities with drainage areas greater than 250 acres, the HEC-1 computer program shall be used to compute a detention inflow hydrograph and route this hydrograph through the basin. Relationships between the detention basin water surface elevation, the surface area or storage volume, and the discharge rate shall be developed for use in HEC-1 routing analyses.

For detention basins with drainage areas greater than 100 acres but less than or equal to 250 acres, the HEC-1 program may be used, or an alternative methodology may be utilized to route a design inflow hydrograph through the basin. Alternative methodologies may include manual routing or the use of a generally accepted detention basin routing program other than HEC-1.

8.8 EXTREME CONDITIONS OVERFLOW STRUCTURES

All detention basins should be designed so that overflows occurring during extreme storm conditions (> 100-year) will be directed to the nearest drainage channel without flooding homes and businesses. Overflow depths up to 1 foot above basin bank elevations should be considered. The purpose of this requirement is to ensure that storm runoff will be released into a receiving stream without damage to nearby homes, businesses, or other structures. Grass-lined earthen swales, weirs, concrete-lined overflow sections, and other structures may be utilized.

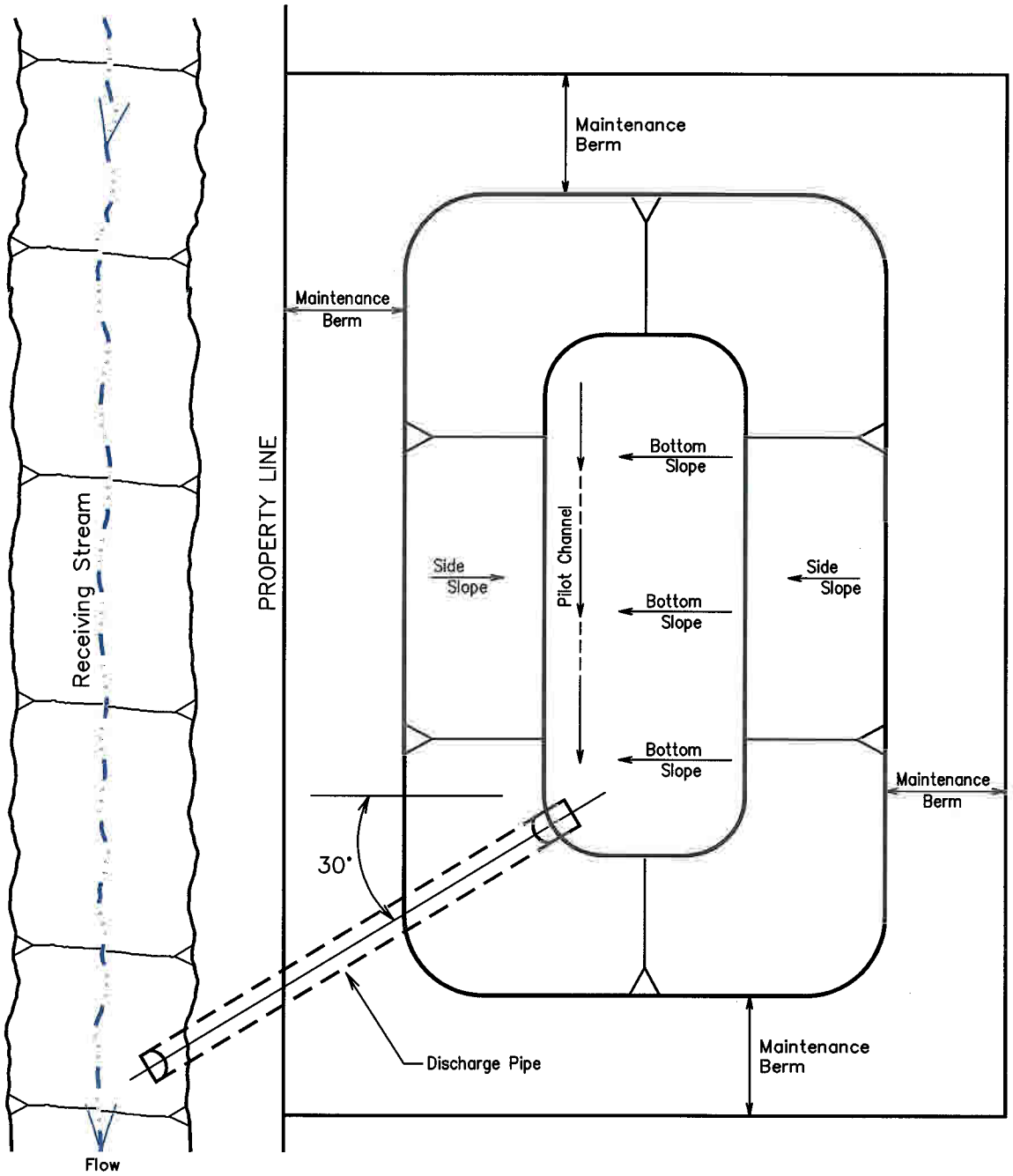

CITY OF LUFKIN
LUFKIN, TEXAS

DESIGN CRITERIA MANUAL

TYPICAL DETENTION BASIN CONFIGURATION

DATE	MARCH 1997	EXHIBIT NO.	8-1

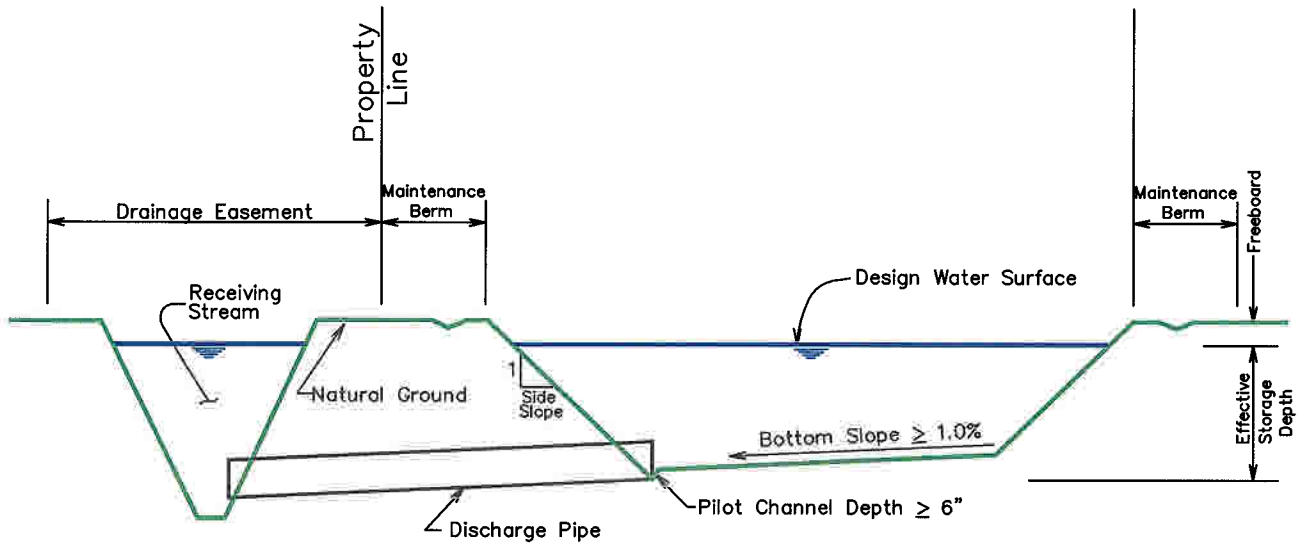

CITY OF LUFKIN
LUFKIN, TEXAS

DESIGN CRITERIA MANUAL

CROSS-SECTION OF TYPICAL DETENTION BASIN

DATE	MARCH 1997	EXHIBIT NO.	8-2

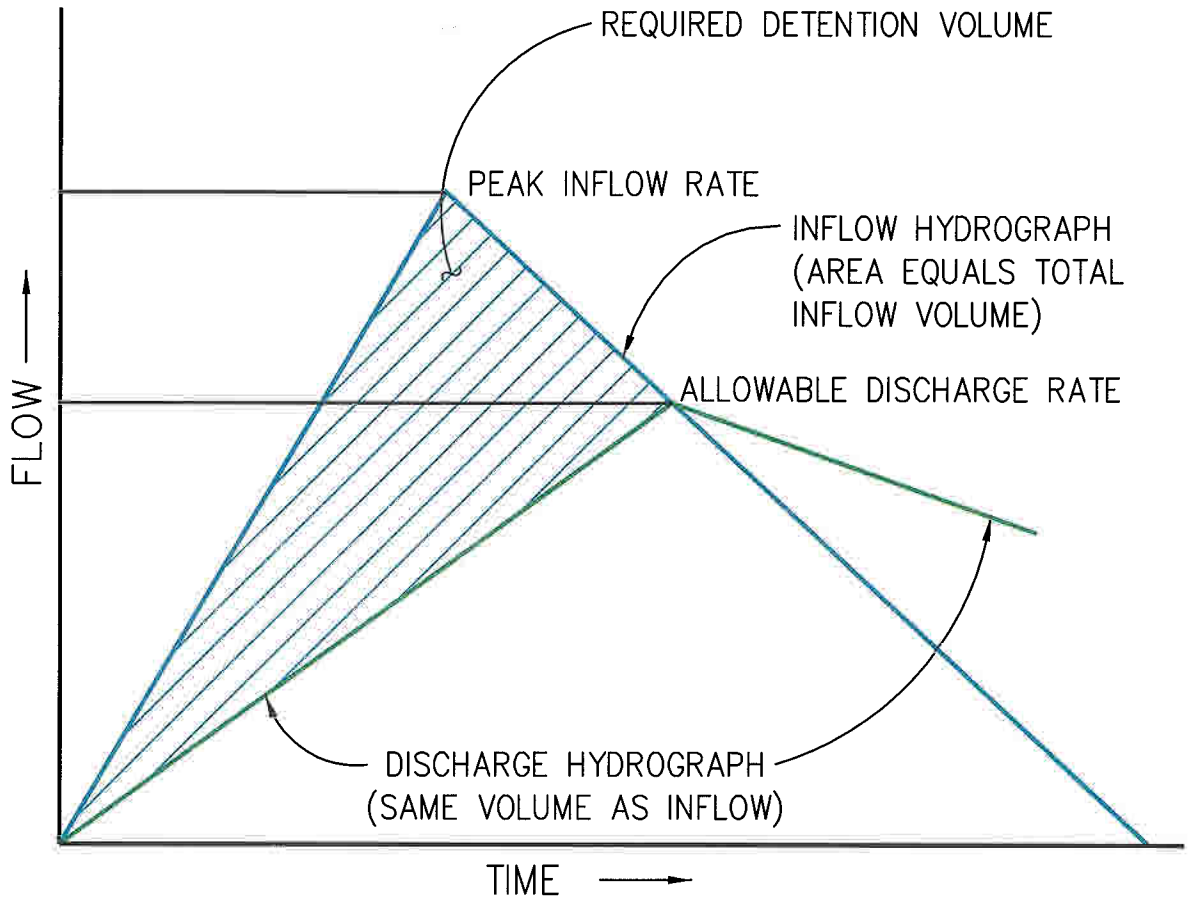

CITY OF LUFKIN, LUFKIN, TEXAS — DESIGN CRITERIA MANUAL	ESTIMATING DETENTION VOLUME REQUIREMENTS FOR BASINS WITH WATERSHED < 50 ACRES	
	DATE MARCH 1997	EXHIBIT NO. 8-3

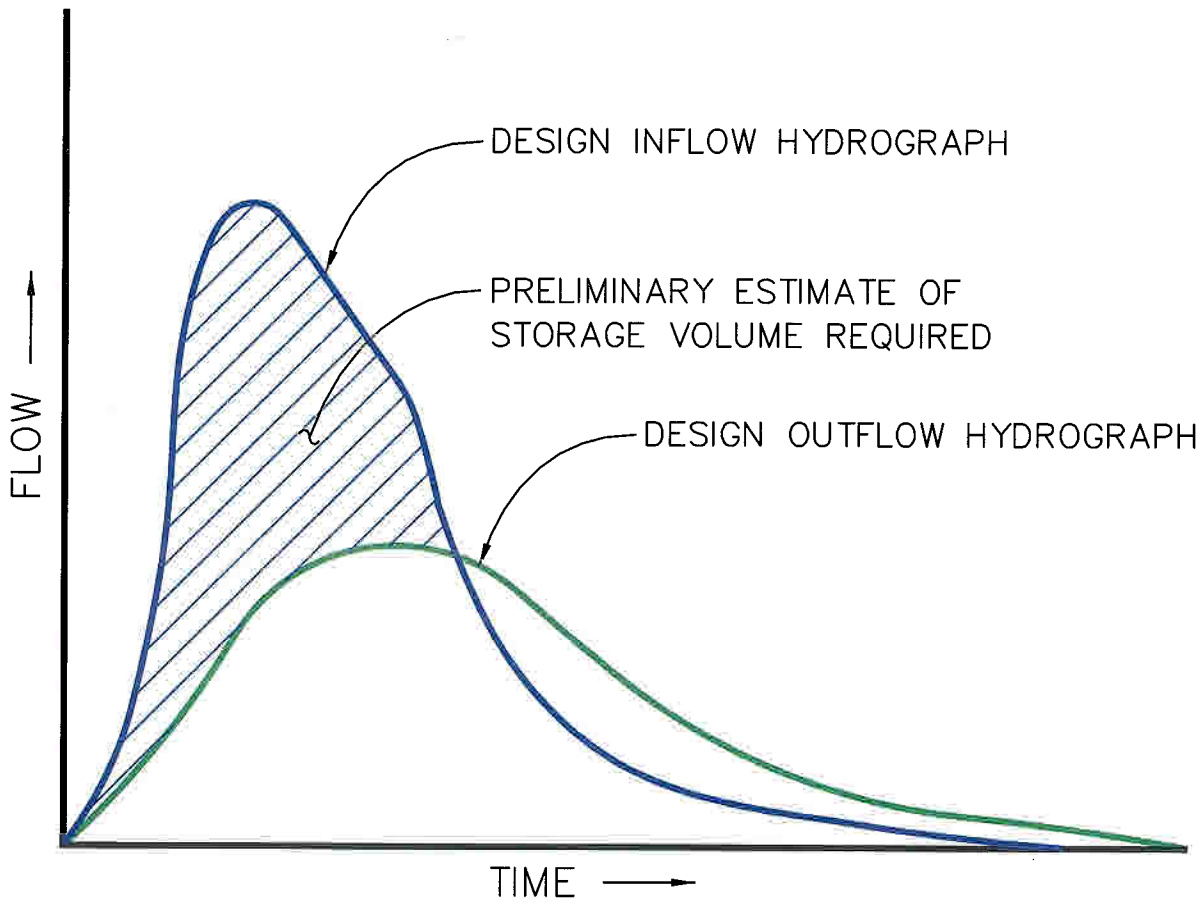

CITY OF LUFKIN, LUFKIN, TEXAS	DESIGN CRITERIA MANUAL	RESTIMATING DETENTION VOLUME REQUIREMENTS FOR BASINS WITH WATERSHEDS > 50 ACRES
	DATE MARCH 1997	EXHIBIT NO. 8-4

9. ANALYSIS AND DESIGN OF PRIMARY DRAINAGE FACILITIES

9.1 HYDRAULIC ANALYSES OF OPEN CHANNELS AND STRUCTURES

9.1.1 General Requirements for Hydraulic Analyses

Hydraulic analyses of existing channels, channel improvement projects, and proposed channels will be required in support of flood plain studies and construction plans involving primary drainage facilities. As defined in this manual, primary drainage facilities include open channels, bridges, culverts, and enclosed systems used to replace sections of open channel.

9.1.2 Storm Frequencies & Other Specific Requirements

Analyses of open channels and associated culverts and bridges shall be based on the following guidelines regarding storm frequencies.

- Channels draining less than 100 acres should be analyzed using 25-year peak runoff rates.
- Channels draining more than 100 acres but less than 250 acres should be analyzed using 50-year peak runoff rates.
- Channels draining more than 250 acres should be analyzed using 100-year peak runoff rates.

For studies involving FEMA submittals, the 10-year, 50-year, 100-year, and 500-year storm frequencies must be analyzed.

9.1.3 Peak Flow Rates

For drainage area less than 250 acres, peak flow rates may be computed using the Rational Method. For drainage area greater than 250 acres, peak flow rates used in the analysis of primary drainage facilities should be based on HEC-1 modeling results.

9.1.4 Acceptable Methodologies

For drainage facilities receiving storm runoff from watersheds of less than 250 acres, simple single cross-section methods and the Manning equation may be utilized to establish design water surface elevations and other hydraulic data at specific locations such as storm sewer and detention outfalls or culvert and bridge locations. Culverts may be analyzed using generally accepted methods or computer programs which deal specifically with culvert hydraulics.

Hydraulic analyses of primary drainage facilities with watershed areas greater than 250 acres may be accomplished using the HEC-2 and HEC-RAS computer programs developed at the Hydrologic Engineering Center of the U.S. Army Corps of Engineers.

9.1.4.1 The HEC-2 Computer Program

The HEC-2 computer program was developed at the Hydrologic Engineering Center of the U.S. Army Corps of Engineers in the 1970's. The HEC-2 program is the most widely-used and accepted tool available for hydraulic analyses of open channels and flood plains. The program is

accepted by the Federal Emergency Management Agency and many other governmental agencies. The HEC-2 program is based on the use of Manning's Equation to analyze flow conditions in open channels. Special capabilities are available to facilitate the analysis of bridges, culverts, and other structures.

9.1.4.2 The HEC-RAS Computer Program

The HEC-RAS (River Analysis System) is a computer program currently under development at the Hydrologic Engineering Center of the U.S. Army Corps of Engineers. The HEC-RAS program will possess new capabilities which will enable it to analyze unsteady flow conditions, transitions from subcritical to supercritical flow, and other conditions which cannot readily be analyzed using the HEC-2 program. The HEC-RAS program is intended to eventually replace the HEC-2 program, although this will not take place for several years. Because the HEC-RAS is still under development, it is not discussed in detail in this manual.

9.1.5 Data Requirements

The basic data required for HEC-2 modeling of open channels and channel structures consists of flow rates, cross-sections, friction loss coefficients, minor loss coefficients, and special data for analyzing bridges and culverts.

9.1.6 Roughness Coefficients

The HEC-2 program utilizes Manning's Equation in analyzing flow conditions in open channels. The roughness coefficient used in Manning's Equation varies inversely with conveyance. In other words, the lower the roughness coefficient, the greater the conveyance and the higher the rate of flow the channel can carry. Table 9-1 provides a summary of Manning roughness coefficients for channels and flood plains.

TABLE 9-1: MANNING ROUGHNESS COEFFICIENTS			
Type of Channel and Description	Minimum	Normal	Maximum
Excavated or Dredged Channels			
Concrete Lined Channels	0.011	0.013	0.015
Earthen Channels, Straight and Uniform			
Clean, After Weathering	0.016	0.018	0.020
With Short Grass, Few Weeds	0.022	0.027	0.033
Earthen Channels, Winding and Sluggish			
No Vegetation	0.023	0.025	0.030
Grass, Some Weeds	0.025	0.030	0.033
Dense Weeds or Plants in Deep Channels	0.030	0.035	0.040
Earth Bottom and Rubble Sides	0.028	0.030	0.035
Stony Bottom and Weedy Banks	0.025	0.035	0.040
Cobble Bottom and Clean Sides	0.030	0.040	0.050
Channel Not Maintained, Weeds & Brush Uncut			
Dense Weeds, High as Flow Depth	0.050	0.080	0.120
Clean Bottom, Brush on Sides	0.040	0.050	0.080
Same, Highest Stage of Flow	0.045	0.070	0.110
Dense Brush, High Stage	0.080	0.100	0.140
Natural Streams			
Clean, Straight, Full Stage, No Rifts or Deep Pools	0.025	0.030	0.033
Same as Above, But Some Stones and Weeds	0.030	0.035	0.040
Clean, Winding, Some Pools and Shoals	0.033	0.040	0.045
Same as Above, But Some Weeds and Stones	0.035	0.045	0.050
Same as Above, Lower Stages, More Ineffective Areas	0.040	0.048	0.055
Sluggish Reaches, Weedy, Deep Pools	0.050	0.070	0.080
Flood Plains			
Pasture, No Brush			
Short Grass	0.025	0.030	0.035
High Grass	0.030	0.035	0.050
Cultivated Areas			
No Crop	0.020	0.030	0.040
Mature Row Crops	0.025	0.035	0.045
Mature Field Crops	0.030	0.040	0.050
Brush			
Scattered Brush, Heavy Weeds	0.035	0.050	0.070
Light Brush and Trees, in Winter	0.035	0.050	0.060
Light Brush and Trees, in Summer	0.040	0.060	0.080
Medium to Dense Brush, in Winter	0.045	0.070	0.110
Medium to Dense Brush, in Summer	0.070	0.100	0.160
Trees			
Dense Willows, Summer, Straight	0.110	0.150	0.200
Cleared Land with Stumps, No Sprouts	0.030	0.040	0.050
Same as Above with Heavy Growth of Sprouts	0.050	0.060	0.080
Heavy Stand of Timber, a Few Down Trees, Little Undergrowth, Flood Stage Below Branches	0.080	0.100	0.120
Same as Above, but with Flood Stage Reaching Branches	0.100	0.120	0.160

Table 9-1 may be used to select Manning roughness coefficients given the channel or flood plain condition which exists in the field. Alternatively, Manning roughness coefficients for channels and flood plains may be computed using the following relationship:

$$n = (n_0 + n_1 + n_2 + n_3 + n_4)m$$

where: n = the composite Manning roughness coefficient;

n_0 = a base value for the bare soil surface material of the channel or flood plain;

n_1 = a value to correct for the irregularity of the channel or flood plain;

n_2 = a value to account for variations in the shape and size of the channel or flood plain cross-section;

n_3 = a value to account for obstructions in the channel or flood plain;

n_4 = a value to account for the effects of vegetation;

m = a correction factor for the sinuosity of the channel or flood plain.

Table 9-2 provides representative values for use in computing channel roughness coefficients. Table 9-3 provides a summary of values for use in computing roughness coefficients for flood plains. Rounding roughness coefficients to the nearest 0.005 provides sufficient accuracy for most applications. For example, a computed roughness coefficient of 0.048 may be rounded to 0.050.

TABLE 9-2: PARAMETERS USED IN COMPUTING CHANNEL ROUGHNESS COEFFICIENTS		
Parameter	Accounts For	Representative Values
n_0	Channel Material	0.011 for Concrete 0.020 for Earth 0.025 for Rock Cut 0.024 for Fine Gravel 0.028 for Coarse Gravel
n_1	Degree of Irregularity	0.000 for Smooth 0.005 for Minor Irregularities 0.010 for Moderate Irregularities 0.020 for Severe Irregularities
n_2	Variation of Channel Cross-Section	0.000 for Gradual Variations 0.005 for Alternating Occasionally 0.010 to 0.015 for Alternating Frequently
n_3	Relative Effect of Obstructions	0.000 for Negligible Obstructions 0.010 to 0.015 for Minor Obstructions 0.020 to 0.030 for Appreciable Obstructions 0.040 to 0.060 for Severe Obstructions
n_4	Vegetation	0.005 to 0.010 for Low Vegetation 0.010 to 0.025 for Medium Vegetation 0.025 to 0.050 for High Vegetation 0.050 to 0.100 for Very High Vegetation
m	Degree of Meandering	1.000 for Minor Meandering 1.150 for Appreciable Meandering 1.300 for Severe Meandering

TABLE 9-3: PARAMETERS USED IN COMPUTING FLOOD PLAIN ROUGHNESS COEFFICIENTS		
Parameter	Accounts For	Representative Values
n_0	Base Material	0.010 for Concrete 0.020 for Earth 0.025 for Rock Cut 0.024 for Fine Gravel 0.028 for Coarse Gravel
n_1	Degree of Irregularity	0.000 for Smooth 0.001 to 0.005 for Minor Irregularities 0.006 to 0.010 for Moderate Irregularities 0.011 to 0.020 for Severe Irregularities
n_2	Variation in Cross-Section	0.000 Not Applicable
n_3	Effect of Obstructions	0.000 to 0.004 for Negligible Obstructions 0.005 to 0.019 for Minor Obstructions 0.020 to 0.030 for Appreciable Obstructions
n_4	Amount of Vegetation	0.001 to 0.010 for Small Amounts 0.011 to 0.025 for Medium Amounts 0.026 to 0.050 for Large Amounts 0.051 to 0.100 for Very Large Amounts 0.100 to 0.200 for Extreme Amounts
m	Degree of Meander	1.00 Not Applicable

9.1.7 Bridge & Culvert Modeling

Bridges and culverts may be readily accounted for in the HEC-2 program using features and capabilities built into the program. The HEC-2 program utilizes mathematical functions which relate energy losses to flow conditions at bridges and culverts. User-defined hydraulic data are used to establish the types of flow conditions that occur at a bridge or culvert and to compute a water surface elevation at the upstream side of the bridge or at the upstream end of the culvert. The basic types of flow conditions which may exist at bridges and culverts are low flow, pressure flow, and weir flow. Low flow occurs when water passes under a bridge or through a culvert without submerging the low chord of the bridge structure or the crown of the culvert. Pressure flow occurs whenever the low chord of the bridge or the entire culvert is submerged. Weir flow occurs when flood waters overtop the roadway.

Hydraulic parameters required for analyses of flow conditions at bridges and culverts include pier loss coefficients, pressure flow loss coefficients, and weir coefficients for bridges and entrance loss coefficients, Manning roughness coefficients, and chart and scale numbers for culverts. Minor loss coefficients for expansions and contractions of flow upstream and downstream of bridges and culverts are also required.

For bridges, pier loss coefficients range from 1.05 for circular piers to 1.25 for square piers. The pressure flow loss coefficient for bridges is typically set at a value of about 1.6. The pressure flow loss coefficient is related to the orifice flow coefficient in the standard orifice flow equation

$Q = CA(2gH)^{1/2}$. The pressure flow loss coefficient used by the HEC-2 program for bridge analyses is equal to $1/C^2$. The weir flow coefficient, which is used in the standard weir flow equation $Q = CLH^{3/2}$, ranges from about 2.6 for flow over the bridge deck to about 3.0 for flow over elevated roadway approaches to the bridge.

Tables 9-4 and 9-5 provide a summary of Manning roughness coefficients and entrance loss coefficients for various culvert types. Table 9-6 provides a summary of chart and scale numbers developed by the Federal Highway Administration (FHWA) for various culvert types and entrance configurations. The Special Culvert option available in the HEC-2 program is based on culvert performance nomographs presented by the FHWA in a 1985 publication entitled *Hydraulic Design of Highway Culverts.*

TABLE 9-4: MANNING ROUGHNESS COEFFICIENTS FOR PIPE & BOX CULVERTS	
Description of Pipe	Roughness Coefficient
Reinforced Concrete Pipe and Box Culverts	0.013
HDPE Plastic Pipe	0.012
Corrugated Steel Pipe With 2-2/3" x 1/2" Corrugations	0.024
Corrugated Steel Pipe With 3" x 1" Corrugations	0.027
Corrugated Steel Pipe With 6" x 2" Corrugations	0.030

TABLE 9-5: ENTRANCE LOSS COEFFICIENTS FOR PIPE AND BOX CULVERTS	
Type of Structure and Configuration of Entrance	Coefficient k_e
Concrete Pipe Culverts	
Projecting from Fill	
Socket End (Groove End) of Pipe	0.2
Square-Cut End of Pipe	0.5
Headwall or Headwall & Wingwalls	
Socket End of Pipe (Groove End)	0.2
Square Edge	0.5
Mitered to Conform to Fill Slope	0.7
End Section Conforming to Fill Slope	0.5
Corrugated Steel Culverts	
Projecting From Fill	0.9
Headwall or Headwall & Wingwalls	0.5
Mitered to Conform to Fill Slope	0.2
End Section Conforming to Fill Slope	0.5
Concrete Box Culverts	
Headwall Parallel to Embankment (No Wingwalls)	0.5
Wingwalls at 30 Degrees to 75 Degrees to Barrel	0.4
Wingwalls at 10 Degrees to 25 Degrees to Barrel	0.5
Wingwalls Parallel (Extensions of Sides)	0.7

TABLE 9-6: FHWA CHART AND SCALE NUMBERS FOR PIPE AND BOX CULVERTS		
Chart No.	Scale No.	Description of Culvert and Entrance Configuration
Box Culverts with Flared Wingwalls		
8	1	Wingwalls Flared 30 to 75 Degrees
	2	Wingwalls Flared 90 or 15 Degrees
	3	Wingwalls Flared 0 Degrees (Sides Extended Straight)
Concrete Pipe Culverts		
1	1	Square Edge Entrance with Headwall
	2	Groove End Entrance with Headwall
	3	Groove End Entrance, Pipe Projecting from Fill
Corrugated Steel Culverts		
2	1	Headwall
	2	Mitered to Conform to Fill Slope
	3	Pipe Projecting from Fill

9.1.8 Floodway Delineation

The floodway is a regulatory concept based on the assertion that development and fill in the deepest portion of the 100-year flood plain should be restricted. The floodway is defined as that portion of the 100-year flood plain which would convey 100-year peak flow rates at water surface elevations 1.0 foot above 100-year base flood elevations. The boundaries of the regulatory floodway are delineated on a section-by-section basis using the HEC-2 program. At each cross-section, floodway encroachments are established on each side of the channel. No flow is allowed outside these encroachments. Starting from the edges of the flood plain, the left and right encroachments are moved inward until the 100-year base flood elevation is increased by 1.0 foot. The encroachments are set in such a way as to eliminate equal amounts of flow conveyance on each side of the channel. This process imitates the placement of fill in the shallower portions of the flood plain, which tends to concentrate flow in the deeper portions, increasing flood levels and flow velocities. By limiting the increase in 100-year base flood elevations to 1.0 foot and requiring that all fill elevations are at least 1.0 foot above base flood elevations, a safety factor is established to account for encroachment into the flood plain fringe in the form of fill, building construction, etc.

Floodway delineations are normally completed in the following three-step process.

- Compute preliminary floodway encroachments and surcharges using Method 4, a built-in HEC-2 capability which establishes floodway data based on an equal loss of conveyance on both sides of the channel.
- Use Method 1, in which the user directly inputs floodway encroachment, to fine-tune results obtained using Method 4. Smooth out oscillations in floodway widths, etc. by adjusting Method 4 results.
- Map the floodway boundaries using computed results at individual cross-sections. Fill in areas between cross-sections, making sure that the floodway width between consecutive cross-sections is no less than the smaller computed width and no greater than the greater computed width for the two sections.

Exhibit 9-1 illustrates the results of the floodway mapping process.

9.2 DESIGN OF OPEN CHANNELS

This section describes minimum design requirements for earthen and concrete-lined open channels.

9.2.1 Design Storm Frequency and Conditions

- Channels draining less than 100 acres should be designed to convey 25-year peak runoff rates with a minimum freeboard of 1.0 foot.
- Channels draining more than 100 acres but less than 250 acres should be designed to convey 50-year peak runoff rates with a freeboard of 1.0 foot.
- Channels draining more than 250 acres should be designed to convey 100-year peak runoff rates with a freeboard of 1.0 foot.

Earthen channels may be designed to accommodate existing or interim levels of development within the watershed. However, right-of-way widths shall be based on the channel size needed to accommodate peak flow rates from a fully-developed watershed. All concrete-lined channels shall be designed to convey peak flow rates from fully-developed watersheds.

9.2.2 Minimum Design Requirements for Grass-Lined Earthen Channels

The following minimum requirements shall be incorporated into designs of grass-lined earthen channels.

- Channel side slopes shall be no steeper than 3 horizontal to 1 vertical. Flatter slopes may be required when soil conditions are conducive to slope instability.
- The minimum channel bottom width is six (6) feet.
- A maintenance berm is required on both sides of the channel. For channels with top widths of 30 feet or less, the minimum maintenance berm width is 15 feet. For top widths between 30 feet and 60 feet, 20-foot maintenance berms are required. For channels with top widths greater than 60 feet, the minimum maintenance berm width is 30 feet.
- Channel backslope drain swales and interceptor structures are required to prevent flow down the ditch side slopes. The maximum spacing for interceptor structures is 600 feet.
- Channel side slopes must be vegetated immediately after construction to minimize erosion.
- Flow from roadside ditches must be conveyed into open channels through standard roadside ditch interceptor structures as described in Section 10.
- A geotechnical investigation and report on local soil conditions is required for all channel construction and improvement projects.

Exhibit 9-2 illustrates a typical design cross-section for a trapezoidal earthen channel.

9.2.3 Minimum Design Requirements for Trapezoidal Concrete-Lined Channels

Concrete-lined channels shall be designed on the basis of the following minimum requirements.

- All concrete slope paving shall consist of Class A concrete.
- The minimum bottom width shall be eight (8) feet.
- The side slopes of the channel shall be no steeper than 1.5 horizontal to 1 vertical.
- A maintenance berm is required on both sides of the channel. The berm width shall be at least 20 feet on one side of the channel and at least 10 feet on the other side.
- Concrete slope protection shall have the minimum thickness and reinforcement indicated in Table 9-7.

TABLE 9-7: MINIMUM CONCRETE THICKNESS AND REINFORCEMENT

Channel Side Slope (H:V)	Minimum Concrete Thickness	Minimum Reinforcement
3:1	4 inches	6 x 6 x W2.9 x W2.9 welded wire fabric
2:1	5 inches	6 x 6 x W4.0 x W4.0 welded wire fabric
1.5:1	6 inches	4 x 4 x W4.0 x W4.0 reinforcement

- All slope paving shall include a minimum 18-inch toe wall at the top and sides and a 24-inch toe wall across or along the channel bottom for clay soils. For sandy soils, a 36-inch toe wall is required across the channel bottom.
- For fully lined channels, no backslope drain swales or interceptor structures are required. For partially lined channels, backslope drain swales and interceptor structures located at maximum 600-foot intervals are required.
- A geotechnical investigation and report on local soil conditions is required for all channel construction and improvement projects.
- Weep holes shall be used to relieve hydrostatic pressure behind lined channel sections. The specific type, size, and placement of the weep holes shall be based on the recommendations of the geotechnical report.
- Where construction is to take place under muddy conditions or where standing water is present, a seal slab of Class C concrete shall be placed in the channel bottom prior to placement of the concrete slope paving.
- Control joints shall be provided at a maximum spacing of approximately 25 feet. A sealing agent shall be utilized to prevent moisture infiltration at control joints.

Exhibit 9-3 illustrates a typical design cross-section for a trapezoidal concrete-lined channel.

9.2.4 Minimum Design Requirements for Rectangular Concrete Low-Flow Sections

Rectangular low-flow sections may be incorporated into designs for earthen and concrete-lined channels. These low-flow sections may be used to provide flow capacity in areas where the availability of right-of-way is limited. Exhibit 9-4 illustrates the ways in which concrete low-flow sections may be incorporated into channel designs. The following minimum design criteria must be observed in designing low-flow sections.

- All concrete slope paving shall consist of Class A concrete.
- The structural steel design should be based on the use of ASTM A-615, Grade 60 steel.
- The minimum bottom width of the low-flow section shall be eight (8) feet.
- For bottom widths of 12 feet or more, the channel bottom shall be graded toward the centerline at a slope of 1/2 inch per foot.
- The minimum height of vertical concrete walls shall be four (4) feet.
- Escape stairways shall be located at the upstream side of all roadway crossings. Additional escape stairways shall be located along the channel to keep the maximum distance between stairways below 1,400 feet.
- For channels with composite sections (a rectangular concrete low-flow channels with grass-lined side slopes), the top of the vertical concrete wall shall be constructed in such a way as to provide for the possible future placement of concrete slope paving.
- A geotechnical investigation and report on local soil conditions is required for all channel construction and improvement projects.
- Weep holes shall be used to relieve hydrostatic pressure behind lined channel sections. The specific type, size, and placement of the weep holes shall be based on the recommendations of the geotechnical report.
- Where construction is to take place under muddy conditions or where standing water is present, a seal slab of Class C concrete shall be placed in the channel bottom prior to placement of the concrete slope paving.
- Control joints shall be provided at a maximum spacing of approximately 25 feet. A sealing agent shall be utilized to prevent moisture infiltration at control joints.
- Concrete low-flow channels may be used in combination with a maintenance shelf on one or both sides of the channel. The minimum width of the shelf shall be fourteen (14) feet. Pavement used on the shelf shall be capable of supporting maintenance equipment having a concentrated wheel load of at least 1,350 pounds.
- All designs of concrete low-flow sections shall be supported by structural computations.

9.2.5 Acceptable Design Methodologies

For channels draining watershed areas greater than 250 acres, new channel construction plans and proposed improvement designs should be checked and verified using the HEC-2 computer program. For channels draining smaller watersheds, simple single-cross-section methods may be

utilized in checking and verifying the adequacy of the channel design. The channel should be evaluated over a range of flow rates up to and including the required design peak flow rates to check the performance of the channel design and to identify potential erosion problems due to excessive flow velocities.

9.2.6 Design Flow Rates

For open channels receiving runoff from watersheds smaller than 250 acres, design flow rates may be computed using the Rational Method. For channels which receive runoff from watersheds of 250 acres or more, design flow rates should be computed using the HEC-1 computer program. Peak flow rates computed at specific points along the channel should be plotted versus channel station and connected with straight lines. The resulting graph may be used to determine the design flow rate at any point along the channel. Exhibit 9-5 illustrates a typical graph of peak flow rate versus stream station.

9.2.7 Maximum Flow Velocities

Table 9-8 provides a summary of allowable flow velocities for open channels. In the table, the maximum allowable flow velocity is related to the type of channel, the slope treatment, and the soil structure. It is recommended that 25-year flow rates be analyzed to identify erosive flow velocities.

TABLE 9-8: PERMISSIBLE NON-EROSIVE VELOCITIES IN OPEN CHANNELS

Soil Description	Slope Treatment	Maximum Velocity (fps)
Fine Sand	None	1.50
Sandy Loam	None	1.75
Silt Loam	None	2.00
Clay Loam	None	2.50
Stiff Clay	None	3.75
Sandy Soils (Easily Eroded)	Grass	4
Clay Soils (Erosion-Resistant)	Grass	5
Sandy Soils (Easily Eroded)	Rip-Rap	6
Clay Soils (Erosion Resistant)	Rip-Rap	8
Sandy Soils (Easily Eroded)	Concrete	8
Clay Soils (Erosion Resistant)	Concrete	10

9.2.8 Transitions and Bends

Transitions in channel bottom widths or side slopes shall be designed to create minimal flow disturbance and thus minimal energy loss. Transition angles should be less than 12 degrees. When connecting rectangular and trapezoidal channel sections, a warped or wedge-type transition is recommended.

Channel bends should be made as gradual as possible. The minimum bend radius (measured along the center-line of the channel) is three times the top width of flow in the channel at the

maximum design flow depth. Where smaller radii are required, erosion protection consisting of concrete slope protection and/or hand-placed stone or concrete rip-rap is required. In no case, however, shall the bend radius be less than 100 feet. The maximum allowable deflection angle for any bend in an improved channel is 90 degrees.

9.2.9 Right-of-Way Dedication

Rights-of-way must be dedicated to the City of Lufkin before channel construction or improvement plans can be approved.

9.2.10 Maintenance

Open channels located in rights-of-way dedicated to the City of Lufkin will be maintained by the City. Access to channel maintenance berms must be unimpeded, and multiple access points should be provided wherever possible.

9.3 DESIGN OF BRIDGES AND CULVERTS

9.3.1 General Design Requirements

- Culverts carrying storm runoff from watershed areas less than 100 acres should be designed to convey 25-year peak runoff rates at a flow velocity less than or equal to 8 feet per second with the top of road above the upstream 25-year flood level. Bridges should be designed with the low chord at least 1 foot above the 25-year design water surface elevation in the channel or at the channel bank, whichever is lower, and with the top of road above the upstream 100-year flood level.
- Culverts carrying storm runoff from watershed areas greater than 100 acres but less than 250 acres should be designed to convey 50-year peak runoff rates at a flow velocity less than or equal to 8 feet per second with the top of road above the upstream 50-year flood level. Bridges should be designed with the low chord at least 1 foot above the 50-year design water surface elevation in the channel or at the channel bank, whichever is lower, and with the top of road above the upstream 100-year flood level.
- Culverts carrying storm runoff from watershed areas greater than 250 acres should be designed to convey 100-year peak runoff rates at a flow velocity less than or equal to 8 feet per second with the top of road above the upstream 100-year flood level. Bridges should be designed with the low chord at least 1 foot above the 100-year design water surface elevation in the channel or at the channel bank, whichever is lower.

Bridges should be designed to pass design peak flow rates corresponding to fully developed watershed conditions without causing backwater problems, structural damage, or erosion. Whenever possible, bridges shall intersect the channel at an angle of 90 degrees. New bridges should be designed to completely span the existing or proposed channel so that the channel will pass under the bridge without significant contractions or changes in the channel shape. Bridges constructed on existing or interim channels shall be designed to accommodate the ultimate channel section with a minimum of structural modification. Pier bents and abutments should be aligned parallel to the direction of flow in the channel. Pier bents should be placed as far from

the center of the channel as possible and wherever possible should be eliminated directly from the channel bottom. Slope protection in the form of concrete slope paving or rip-rap shall be used to protect earthen channels from erosion which may occur under the bridge.

Culverts should be designed to pass the fully developed design flow without causing backwater problems, structural damage, or erosion. Culverts shall be aligned parallel to the longitudinal axis of the channel to insure maximum hydraulic efficiency and minimize turbulence and erosion. At locations where a difference between the alignment of the channel and the culvert is necessary, the change in alignment should be accomplished upstream of the culvert so that the culvert is aligned with the downstream channel. Adequate slope protection shall be provided upstream and downstream of the culvert to prevent erosion of channel banks. In earthen channels, culvert discharge velocities should not exceed non-erosive velocities presented in Section 9.2.7 of this manual. Culverts should extend completely across roadway and railroad rights-of-way at crossing locations. The minimum diameter for pipe culverts size is 24 inches. The minimum box culvert size is 2 feet by 2 feet.

9.3.2 Acceptable Design Methodologies

Bridges and culverts passing storm runoff from watershed areas greater than 250 acres shall be designed and/or analyzed using the HEC-2 computer program. For smaller watershed areas, culvert analyses and designs may be based on nomographs developed by the Federal Highway Administration and published in *Hydraulic Design of Highway Culverts (FHWA, 1985)*. Other generally accepted methodologies and computer programs may be utilized for bridges and culverts passing storm runoff from watershed areas smaller than 250 acres.

9.3.3 Design Flow Rates

Culverts and bridges shall typically be designed to accommodate design peak flow rates from fully-developed watersheds. Multiple storm frequencies should be analyzed in order to insure that acceptable hydraulic performance is maintained over a wide variety of flow conditions.

9.3.4 Maximum Flow Velocities

The maximum design flow velocity for bridges and culverts shall be 8 feet per second. Lower design velocities must be used when the potential for erosion damage exists in areas upstream and downstream of the bridge or culvert. Velocities must generally be maintained at non-erosive levels in all areas in which earthen channels are not protected by rip-rap or concrete slope paving. Table 9-8 provides a summary of maximum allowable flow velocities for various soil conditions.

9.3.5 Slope Protection

Concrete slope paving or rip-rap must be provided to protect earthen channel slopes wherever velocities upstream and downstream of bridges and culverts exceed non-erosive values. The slope protection shall extend upstream and downstream a sufficient distance to reach a location where flow velocities are at non-erosive levels. The maximum flow velocity for areas protected by rip-rap is 8 feet per second. For areas protected by concrete slope paving, the maximum allowable flow velocity is 10 feet per second.

9.3.6 Structural Requirements

All pipe and box culverts shall satisfy the following minimum structural design requirements:

- All precast reinforced concrete pipe shall be ASTM C-76.
- All precast reinforced concrete box culverts with more than two feet of earth cover shall be ASTM C789-79. All precast reinforced box culverts with less than two feet of earth cover shall be ASTM 850-79.
- All corrugated steel pipes shall be aluminized in accordance with AASHTO M-36..
- AASHTO HS20-44 loading shall be used for all culverts.
- Guardrails are recommended at all roadway culvert crossings. The approach ends of the guardrail should be flared away from the roadway and properly anchored.
- Joint sealing materials for precast concrete culverts shall comply with the "ASHTO Designation M-198 74 I, Type B, Flexible Plastic Gasket (Bitumen)" specification.
- Two-sack-per-ton cement-stabilized sand shall be used for backfill around culverts.
- A 6-inch bedding of two-sack-per-ton cement-stabilized sand is required for all precast concrete box culverts.

9.4 DESIGN OF ENCLOSED DRAINAGE SYSTEMS

9.4.1 Systems Included in this Category

Enclosed drainage systems include pipe and box culverts used to replace segments of open channel longer than the typical width of a road or railroad right-of-way.

9.4.2 General Design Requirements

Enclosed systems are subject to the same basic requirements as open channels and culverts.

- Enclosed systems draining less than 100 acres should be designed to convey 25-year peak runoff rates at flow velocities less than or equal to 8 feet per second.
- Enclosed systems draining more than 100 acres but less than 250 acres should be designed to convey 50-year peak runoff rates at flow velocities less than or equal to 8 feet per second.
- Enclosed systems draining more than 250 acres should be designed to convey 100-year peak runoff rates at flow velocities less than or equal to 8 feet per second.

Enclosed drainage systems shall be designed to accommodate design peak runoff rates for fully-developed watershed conditions. The minimum inside pipe dimension is 2 feet. Computed hydraulic grade line elevations shall be maintained below ground elevations or street gutter elevations, whichever are lower. The starting water surface elevation at the outlet from the enclosed system shall be equal to the water surface elevation in the receiving stream. Structural requirements for enclosed systems are identical to those specified for pipe and box culverts. Manholes or junction boxes shall be located no more than 600 feet apart along the entire length of the system and at all locations where changes in culvert size and shape occur. Outfall

structures shall conform to the requirements set forth for storm sewer outfalls in Section 10 of this manual. The right-of-way width required for enclosed systems will be set equal to the maximum pipe or box width plus 2 times the depth to the culvert invert or 30 feet, whichever is smaller.

9.4.3 Acceptable Design Methods

Enclosed systems draining watershed areas greater than 250 acres may be analyzed using the HEC-2 computer program. Combinations of ground profile (GR) and bridge table (BT) records may be used to define culvert shapes and depths below ground. Manual or spreadsheet-based computations may be used in designing or analyzing enclosed systems which drain storm water from watersheds smaller than 250 acres. For these calculations, full pipe flow may be assumed. Both friction losses and minor losses due to transitions, bends, junctions, manholes, etc. should be accounted for.

9.4.4 Friction Losses

Friction losses in enclosed systems may be computed using a form of the Manning Equation:

$$H_F = (n^2 Q^2 L)/(2.22 A^2 R^{4/3})$$

where: H_F = friction loss, in feet;

Q = flow rate in cubic feet per second;

L = culvert length in feet;

A = cross-sectional area of flow in square feet;

R = the hydraulic radius = cross-sectional area divided by wetted perimeter, in feet.

For concrete pipe and box culverts, the Manning roughness coefficient should be set equal to 0.013. For corrugated steel pipe culverts, the roughness coefficient varies with the type of corrugation. For 2-2/3" x 1/2" corrugations, n = 0.024. For 3" x 1" and 5" x 1" corrugations, n = 0.027. For 6" x 2" corrugations, n = 0.030.

9.4.5 Minor Losses

Minor losses in enclosed systems are caused by disturbances in flow conditions at manholes, transitions in culvert size, entrances to pipes, etc. Minor losses are typically computed using a loss coefficient and flow velocities in upstream and downstream pipe segments. Entrance losses are computed using the following equation:

$$\text{Entrance Loss} = K_e * V^2/2g$$

where: K_e = the entrance loss coefficient;

V = the flow velocity in the culvert, in feet per second;

g = the acceleration of gravity = 32.2 feet/second^2.

For this calculation, the velocity upstream of the pipe entrance is assumed to be zero. Table 9-9 provides a summary of entrance loss coefficients for a number of culvert entrance configurations.

Exit losses may be computed in the same way. The exit loss coefficient may be assumed to be equal to 1.0 for most applications.

TABLE 9-9: ENTRANCE LOSS COEFFICIENTS FOR PIPE AND BOX CULVERTS	
Type of Structure and Configuration of Entrance	Coefficient k_e
Concrete Pipe Culverts	
Projecting from Fill	
Socket End (Groove End) of Pipe	0.2
Square-Cut End of Pipe	0.5
Headwall or Headwall & Wingwalls	
Socket End of Pipe (Groove End)	0.2
Square Edge	0.5
Mitered to Conform to Fill Slope	0.7
End Section Conforming to Fill Slope	0.5
Corrugated Steel Culverts	
Projecting From Fill	0.9
Headwall or Headwall & Wingwalls	0.5
Mitered to Conform to Fill Slope	0.2
End Section Conforming to Fill Slope	0.5
Concrete Box Culverts	
Headwall Parallel to Embankment (No Wingwalls)	0.5
Wingwalls at 30 Degrees to 75 Degrees to Barrel	0.4
Wingwalls at 10 Degrees to 25 Degrees to Barrel	0.5
Wingwalls Parallel (Extensions of Sides)	0.7

Minor losses at inlets and manholes may be computed using the following relationship:

$$\text{Head Loss} = (V_2^2 - KV_1^2)/2g$$

where: K = the minor loss coefficient;

V_1= flow velocity in the upstream culvert, in feet per second;

V_2 = flow velocity in the downstream culvert, in feet per second;

g = the acceleration of gravity = 32.2 feet/second^2.

Table 9-10 presents suggested loss coefficients for inlet and manhole configurations.

TABLE 9-10: MINOR LOSS COEFFICIENTS FOR INLETS AND MANHOLES	
Type of Structure	Coefficient K
Inlet on Main Line	0.50
Inlet on Main Line with Branch Lateral	0.25
Manhole on Main Line with 22.5-Degree Lateral	0.75
Manhole on Main Line with 45-Degree Lateral	0.50
Manhole on Main Line with 60-Degree Lateral	0.35
Manhole on Main Line with 90-Degree Lateral	0.25

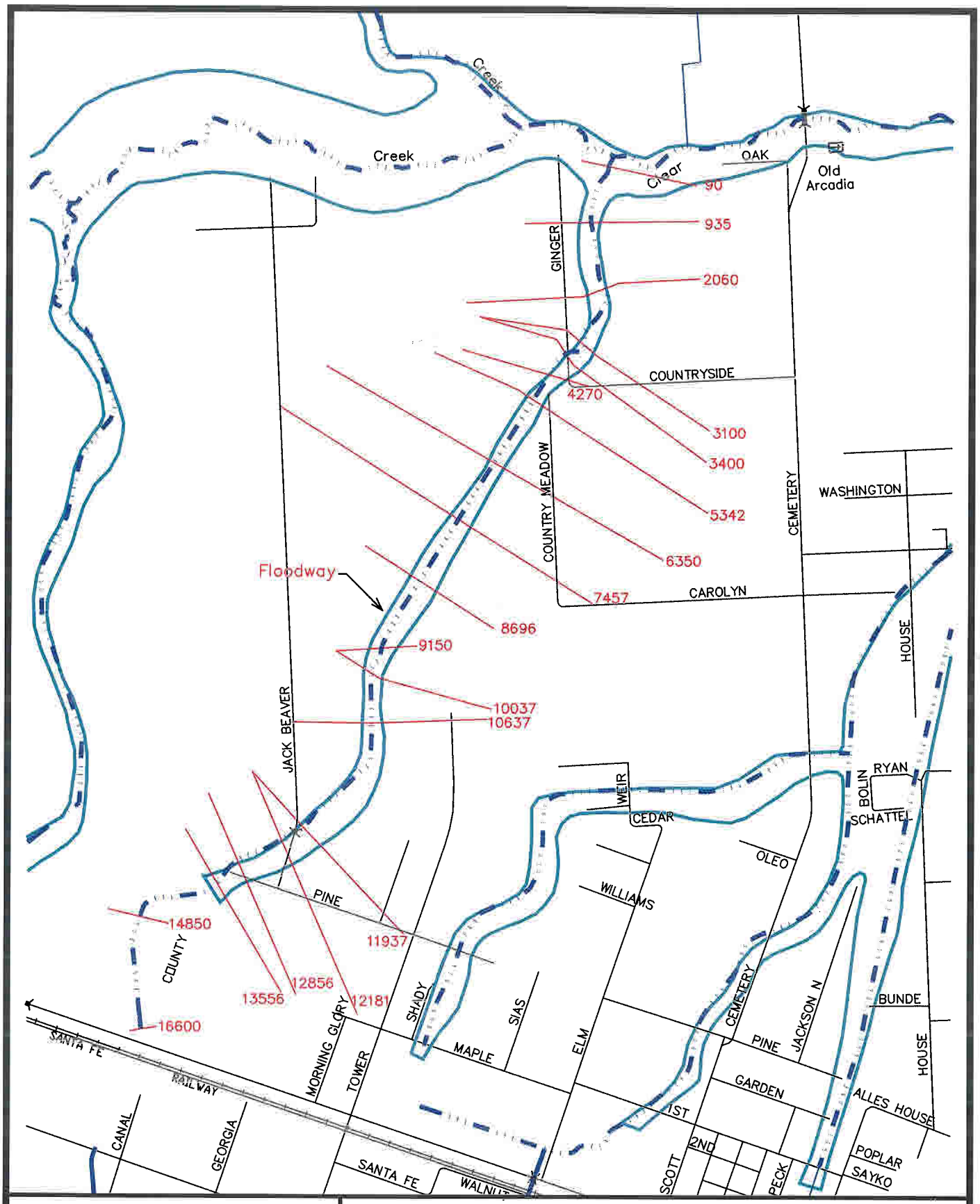

CITY OF LUFKIN
LUFKIN, TEXAS

DESIGN CRITERIA MANUAL

FLOODWAY MAP

DATE	MARCH 1997	EXHIBIT NO.	9-1

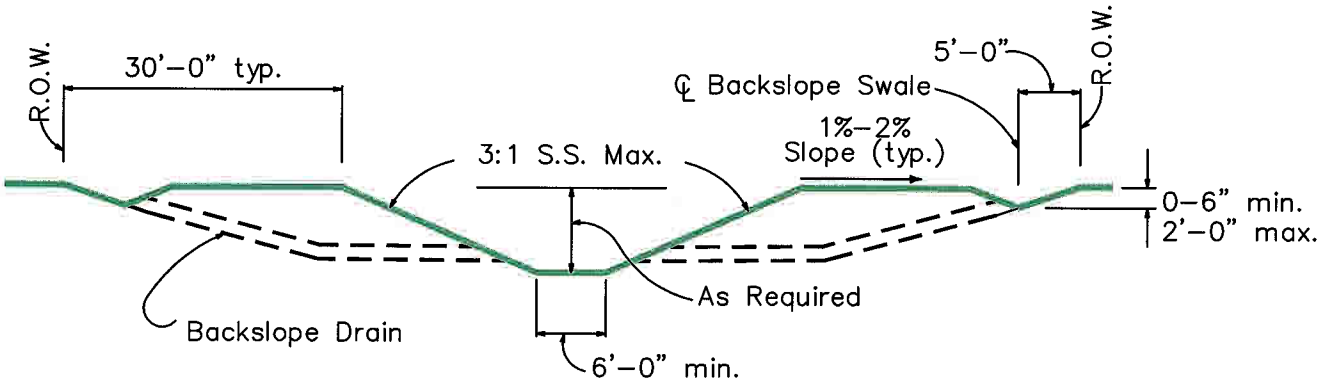

CITY OF LUFKIN
LUFKIN, TEXAS

DESIGN CRITERIA MANUAL

TYPICAL SECTION
GRASS–LINED TRAPEZOIDAL CHANNEL

DATE	MARCH 1997	EXHIBIT NO.	9-2

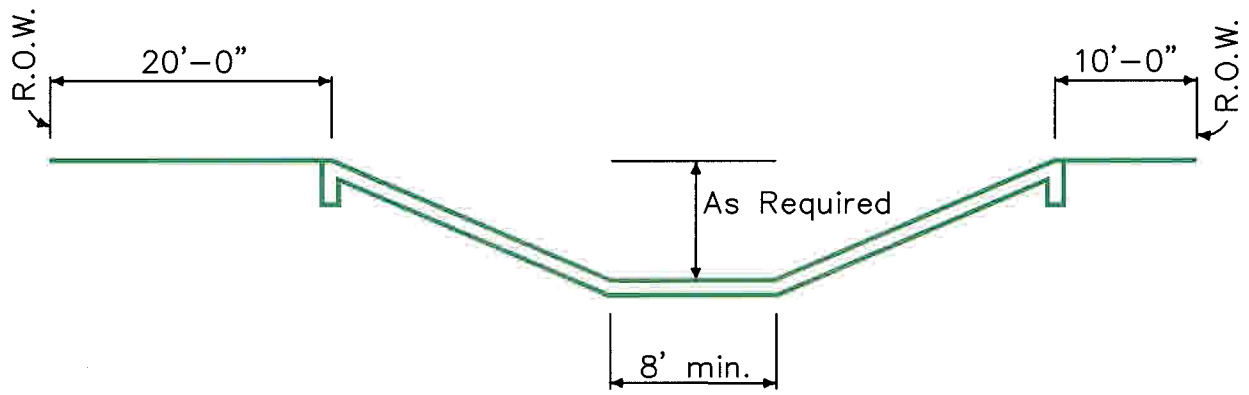

(or any larger 2 foot increment)

DESIGN CRITERIA MANUAL

TYPICAL SECTION
CONCRETE–LINED TRAPEZOIDAL CHANNEL

DATE	MARCH 1997	EXHIBIT NO.	9-3

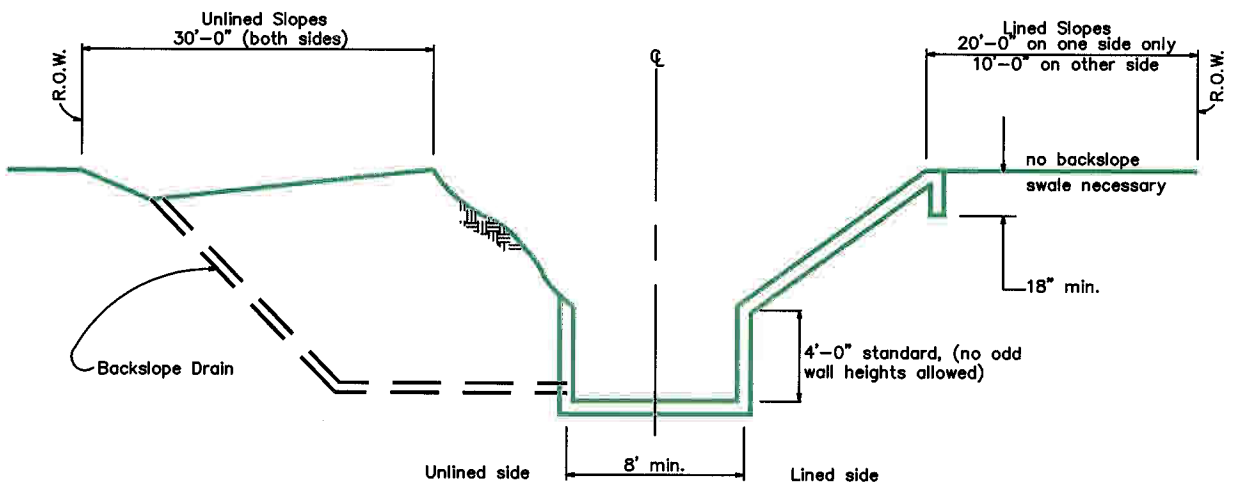

CITY OF LUFKIN
LUFKIN, TEXAS

DESIGN CRITERIA MANUAL

TYPICAL CROSS-SECTION, CONCRETE-LINED WITH RECTANGULAR LOW FLOW SECTION

DATE	MARCH 1997	EXHIBIT NO.	9-4

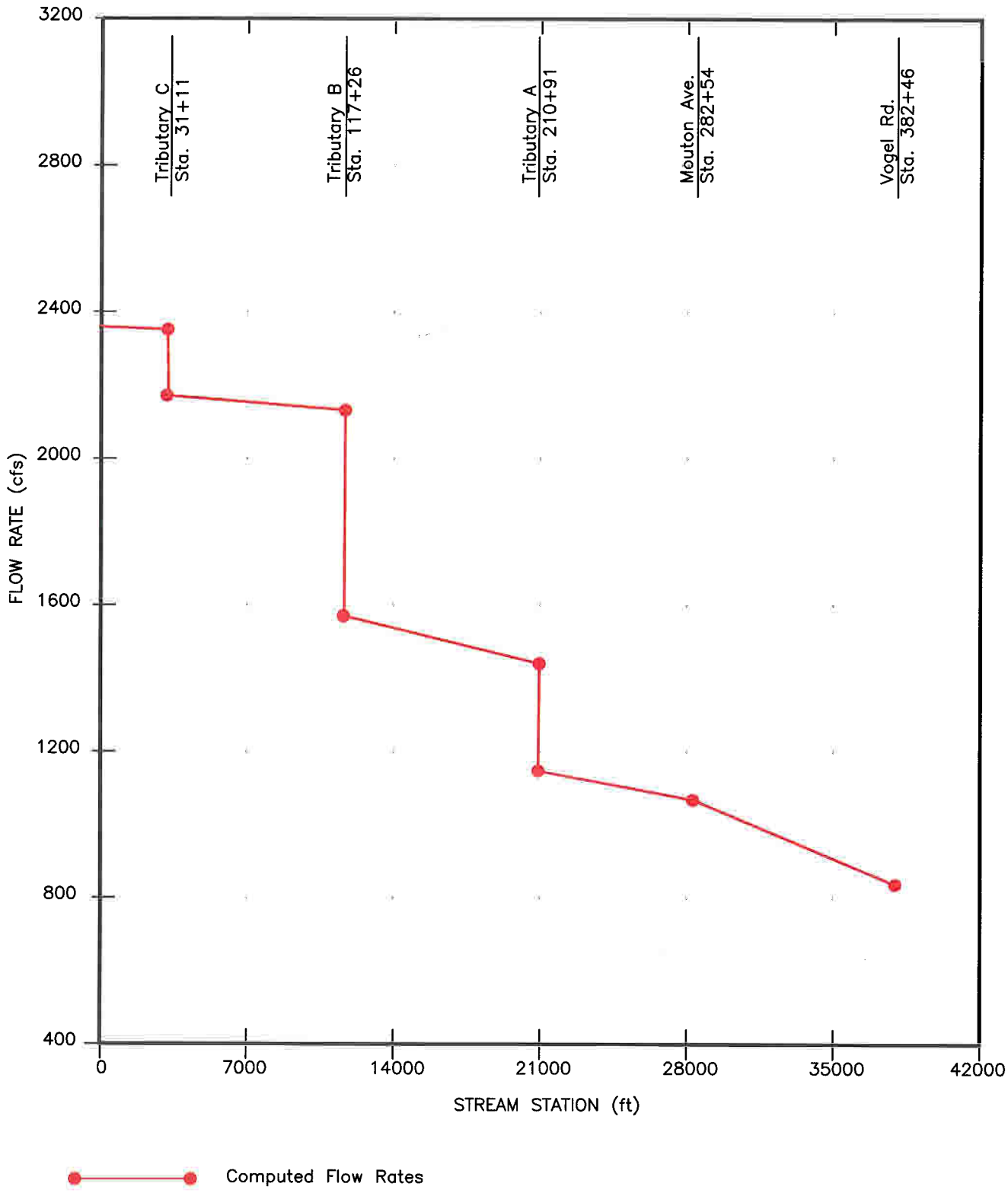

CITY OF LUFKIN
LUFKIN, TEXAS

DESIGN CRITERIA MANUAL

GRAPH OF
PEAK FLOW RATE vs. STREAM STATION

DATE	MARCH 1997	EXHIBIT NO.	9-5

10. DESIGN OF SECONDARY DRAINAGE FACILITIES

10.1 FACILITIES INCLUDED IN THIS CATEGORY

For the purposes of this manual, secondary drainage facilities include storm sewer systems, roadside ditches and associated structures, sheet flow swales, and other facilities which typically serve relatively small drainage areas.

10.2 DESIGN OF STORM SEWER FACILITIES

10.2.1 General Design Requirements

All streets and storm sewers must be designed in accordance with the following guidelines.

- Street gutters along residential streets should carry peak runoff rates from a 5-year storm event without overtopping curbs. Major thoroughfares should accommodate 5-year peak runoff rates with a minimum 10-foot dry travel lane and 25-year peak runoff rates without overtopping curbs.
- For systems draining less than 100 acres, storm sewers should be designed to convey 5-year peak runoff rates at a maximum water level not to exceed the top of curb. Peak 25-year runoff rates shall be accommodated with a maximum flow depth of 6 inches of depth above the crown of the roadway.
- For systems draining more than 100 acres but less than 250 acres, storm sewers should be designed to convey 10-year peak runoff rates at a maximum water level not to exceed the top of curb. Peak 50-year runoff rates shall be accommodated with a maximum flow depth of 6 inches of depth above the crown of the roadway.
- For systems draining more than 250 acres, storm sewers should be designed to convey 25-year peak runoff rates at a maximum water level not to exceed the top of curb. Peak 100-year runoff rates shall be accommodated with a maximum flow depth of 6 inches of depth above the crown of the roadway.
- The minimum inside pipe dimension for storm sewer systems will be 18 inches. The minimum design velocity for full gravity flow will be 2.0 feet per second.
- Starting water surface elevations for calculations of hydraulic grade line elevations in storm sewer systems shall be set equal to the elevation in the receiving stream for the storm frequency that corresponds to the design storm frequency for the storm sewer system. This requirement shall apply to both primary and secondary design requirements for storm sewer systems. For example, if the primary requirement is to convey 5-year flows below the top of curb, the 5-year water surface elevation in the receiving stream should be used as the starting elevation for hydraulic grade line calculations. If the secondary requirement is to convey 25-year flows at a maximum of 6 inches above the crown of the roadway, the 25-year water surface elevation in the receiving stream should be used as the starting elevation.

All storm sewers located underneath paved streets or other paved areas shall be constructed of reinforced concrete pipe. Storm sewers passing through unpaved areas may be constructed of corrugated steel or plastic pipe having an estimated life expectancy of at least 25 years. The minimum acceptable storm sewer pipe diameter is 18 inches. A permanent drainage easement must be provided for all storm sewers to provide assurance of future accessibility for pipe replacement or repair. The minimum width of the easement will be the maximum width of the storm sewer pipe or box plus 2 times the depth to the storm sewer invert or 30 feet, whichever is smaller.

Storm sewer outfalls shall be designed as illustrated on Exhibits 10-1 and 10-2.

10.2.2 Peak Flow Rates

Peak flow rates for storm sewer analyses will be computed using the Rational Method.

10.2.3 Acceptable Methods for Hydraulic Analysis

Manual or spreadsheet-based computations may be used in designing or analyzing storm sewer systems. Preliminary storm sewer sizing may be accomplished by selecting pipes which carry design flow rates at full friction flow capacity. This capacity may be computed using a form of the Manning Equation:

$$Q = (1.49/n)\ A\ R^{2/3}\ S^{1/2}$$

where: Q = flow rate in cubic feet per second;

n = the Manning roughness coefficient;

A = cross-sectional area of flow assuming full flow in pipe or box, in square feet;

R = the hydraulic radius = cross-sectional area divided by wetted perimeter, in feet;

S = the slope of the pipe or box, in feet per foot.

For these calculations, full pipe flow may be assumed. Both friction losses and minor losses due to transitions, bends, junctions, manholes, etc. should be accounted for.

10.2.4 Friction Losses

Friction losses in enclosed storm sewer systems may be computed using the following form of the Manning Equation:

$$H_F = (n^2\ Q^2\ L)/(2.22\ A^2\ R^{4/3})$$

where: H_F = friction loss, in feet;

Q = flow rate in cubic feet per second;

L = culvert length in feet;

A = cross-sectional area of flow in square feet;

R = the hydraulic radius = cross-sectional area divided by wetted perimeter, in feet.

For concrete pipes and box culverts and smooth plastic pipes, the Manning roughness coefficient should be set equal to 0.013. For corrugated steel and plastic pipe culverts, the roughness coefficient varies with the type of corrugation. For 2-2/3" x 1/2" corrugations, n = 0.024. For 3" x 1" and 5" x 1" corrugations, n = 0.027. For 6" x 2" corrugations, n = 0.030.

10.2.5 Minor Losses

Minor losses in enclosed systems are caused by disturbances in flow conditions at manholes, transitions in culvert size, entrances to pipes, etc. Minor losses are typically computed using a loss coefficient and flow velocities in upstream and downstream pipe segments. Entrance losses are computed using the following equation:

$$\text{Entrance Loss} = K_e * V^2/2g$$

where: K_e = the entrance loss coefficient;

V = the flow velocity in the culvert, in feet per second;

g = the acceleration of gravity = 32.2 feet/second^2.

For this calculation, the velocity upstream of the pipe entrance is assumed to be zero. Table 10-1 provides a summary of entrance loss coefficients for a number of culvert entrance configurations. Exit losses may be computed in the same way. The exit loss coefficient may be assumed to be equal to 1.0 for most applications.

TABLE 10-1: ENTRANCE LOSS COEFFICIENTS FOR PIPE AND BOX CULVERTS	
Type of Structure and Configuration of Entrance	Coefficient k_e
Concrete Pipe Culverts	
Projecting from Fill	
Socket End (Groove End) of Pipe	0.2
Square-Cut End of Pipe	0.5
Headwall or Headwall & Wingwalls	
Socket End of Pipe (Groove End)	0.2
Square Edge	0.5
Mitered to Conform to Fill Slope	0.7
End Section Conforming to Fill Slope	0.5
Corrugated Steel Culverts	
Projecting From Fill	0.9
Headwall or Headwall & Wingwalls	0.5
Mitered to Conform to Fill Slope	0.2
End Section Conforming to Fill Slope	0.5
Concrete Box Culverts	
Headwall Parallel to Embankment (No Wingwalls)	0.5
Wingwalls at 30 Degrees to 75 Degrees to Barrel	0.4
Wingwalls at 10 Degrees to 25 Degrees to Barrel	0.5
Wingwalls Parallel (Extensions of Sides)	0.7

Minor losses at inlets and manholes may be computed using the following relationship:

$$\text{Head Loss} = (V_2^2 - KV_1^2)/2g$$

where: K = the minor loss coefficient;

V_1= flow velocity in the upstream culvert, in feet per second;

V_2= flow velocity in the downstream culvert, in feet per second;

g = the acceleration of gravity = 32.2 feet/second^2.

Table 10-2 presents suggested loss coefficients for inlet and manhole configurations.

TABLE 10-2: MINOR LOSS COEFFICIENTS FOR INLETS AND MANHOLES	
Type of Structure	Coefficient K
Inlet on Main Line	0.50
Inlet on Main Line with Branch Lateral	0.25
Manhole on Main Line with 22.5-Degree Lateral	0.75
Manhole on Main Line with 45-Degree Lateral	0.50
Manhole on Main Line with 60-Degree Lateral	0.35
Manhole on Main Line with 90-Degree Lateral	0.25

10.2.6 Extreme Event Design

Because storm sewer systems may be designed to accommodate a design storm as small as a 5-year event, more intense rainfall events will cause the capacity of the underground storm sewer system to be exceeded. When this happens, ponding in streets, roadside ditches, and adjacent low-lying areas may begin. This phenomenon is illustrated on Exhibit 10-3. In order to eliminate or at least reduce flood hazards for adjacent properties, careful consideration should be given to street layouts and pavement grades. Streets should be oriented in such a way as to direct storm runoff toward outfall channels or systems without crossing private property. Exhibits 10-4 and 10-5 illustrate some undesirable and acceptable overland flow patterns, respectively. The street grading plan should be developed in such a way as to keep 100-year ponding levels in the streets below the lowest of the following:

- one foot above natural ground;
- one foot over the top of curb;
- one foot below the lowest slab elevation in the vicinity.

In areas where streets cannot be graded to carry sheet flows directly to an open channel, an outfall structure must be provided to collect the sheet flow and convey it to the channel while still meeting the criteria regarding maximum ponding elevations. This structure may be an oversized storm sewer segment or a concrete-lined swale which passes between lots. In either case, a dedicated drainage easement is required, and the outfall structure, along with appurtenant structures such as storm water inlets, must be designed to convey the 100-year peak flow rate from the developed drainage area. These provisions allow sheet flows to be conveyed to the channel without crossing private property. Exhibit 10-6 illustrates the concepts associated with extreme event outfall designs.

10.3 DESIGN OF ROADSIDE DITCHES

10.3.1 General Requirements for Roadside Ditches

The following guidelines must be followed in the design of roadside ditches and culverts to be placed in roadside ditches.

- For drainage areas less than 100 acres, roadside ditches and culverts in those ditches should be designed to convey 5-year peak runoff rates at maximum water levels not to exceed top of

bank elevations. Peak 25-year runoff rates shall be accommodated with a maximum flow depth of 6 inches above the crown of the roadway.

- For drainage areas greater than 100 acres but less than 250 acres, roadside ditches and culverts in those ditches should be designed to convey 10-year peak runoff rates at maximum water levels not to exceed bank elevations. Peak 50-year runoff rates shall be accommodated with a maximum flow depth of 6 inches above the crown of the roadway.
- For drainage areas greater than 250 acres, roadside ditches and culverts in those ditches should be designed to convey 25-year peak runoff rates at maximum water levels not to exceed top of bank elevations. Peak 100-year runoff rates shall be accommodated with a maximum flow depth of 6 inches above the crown of the roadway.

10.3.2 Design Flow Rates for Roadside Ditches

Design peak flow rates may be computed using the Rational Method.

10.3.3 Design Requirements for Roadside Ditches

The following general requirements shall be applied to the designs of all roadside ditches.

- Roadside ditches shall be designed with side slopes no steeper than 3 horizontal to 1 vertical.
- The minimum bottom width shall be two (2) feet.
- The minimum Manning roughness coefficient for roadside ditch design shall be 0.040.
- The minimum grade for roadside ditches shall be 0.2%.
- Hydraulic computations which demonstrate that the ditch design is sufficient to carry design flow rates will be required.
- The ditch must be vegetated immediately after construction or repair to minimize erosion.
- Flow velocities are to be maintained at non-erosive levels. In areas where erosive velocities are anticipated, slope protection measures will be employed.
- The depth of roadside ditches shall be maintained between 1.5 feet and 4.0 feet. Ditches greater than 4.0 feet in depth will be subject to the design requirements for open channels.
- The minimum culvert size for roadside ditches shall be 18 inches.

10.4 DESIGN OF OTHER SECONDARY DRAINAGE FACILITIES

10.4.1 Facilities Included

Other than storm sewers and roadside ditches, secondary drainage facilities may include sheet flow swales, small culverts, and other structures which are intended to handle relatively small volumes of storm runoff.

10.4.2 General Design Requirements

Secondary drainage facilities shall be designed to accommodate peak flow rates from a 5-year design storm event without creating flooding problems or erosion hazards. Maximum 5-year design water levels shall generally be kept below natural ground.

10.4.3 Design Methods

Design methods for secondary drainage facilities must be based on sound engineering practice and widely-accepted methodologies. Examples include the Rational Method, Manning's Equation, standard orifice and weir flow equations, and FHWA culvert design methods.

10.4.4 Peak Flow Rates

Peak design flow rates for secondary drainage facilities shall be computed using the Rational Method. Complete peak flow calculations must be submitted in support of all proposed structure designs.

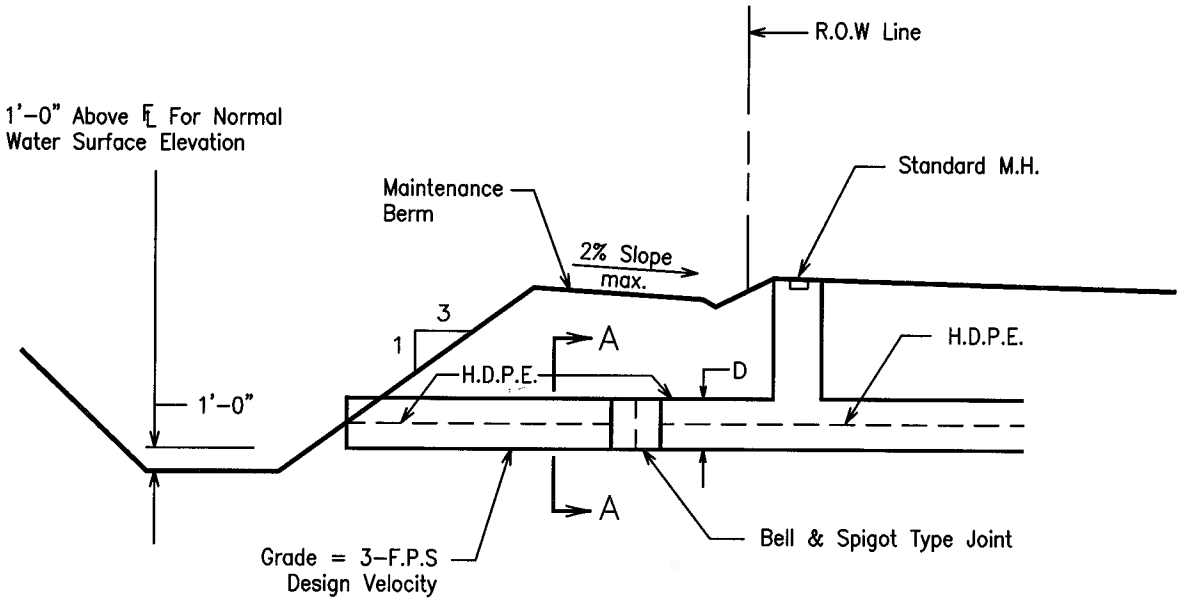

ELEVATION

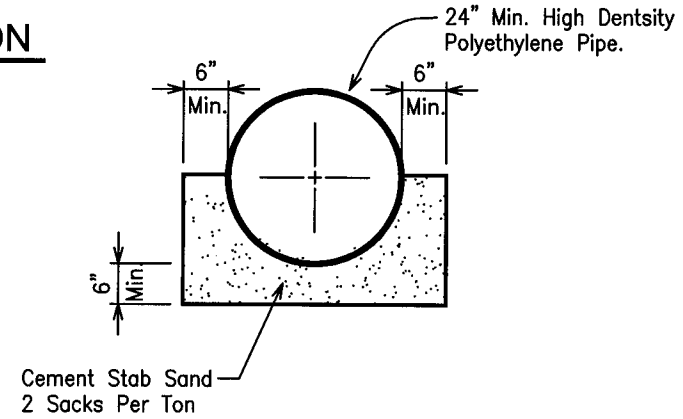

SECTION A-A

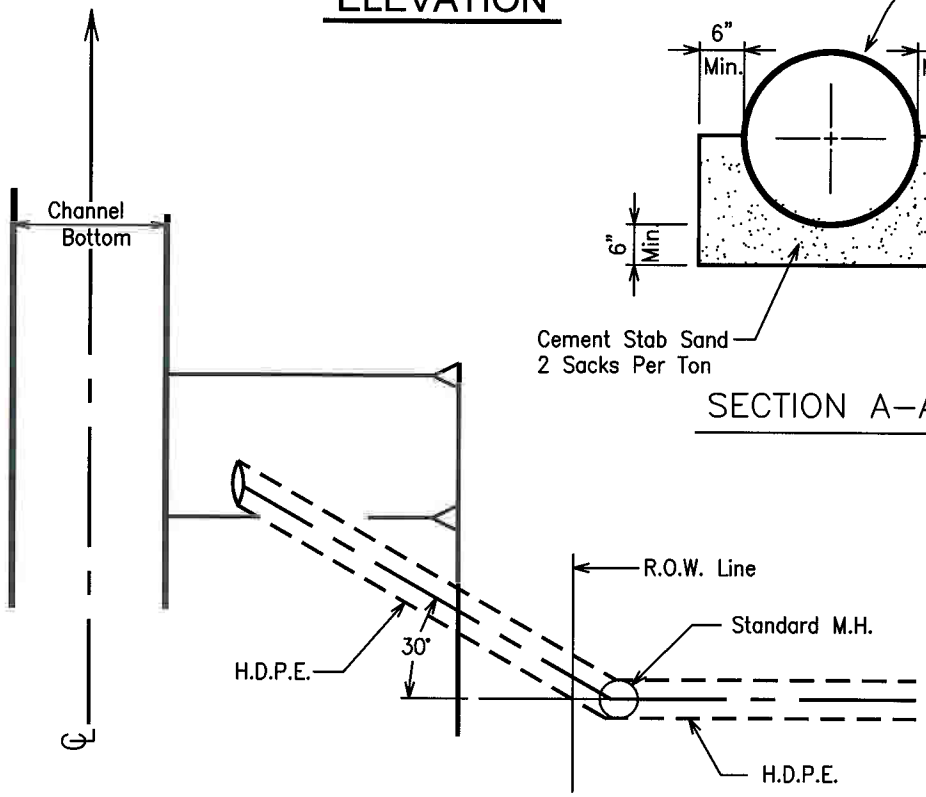

PLAN

CITY OF LUFKIN, LUFKIN, TEXAS	DESIGN CRITERIA MANUAL	TYPICAL STORM SEWER OUTFALL STRUCTURES (24-inch to 42-inch)
	DATE: MARCH 1997	EXHIBIT NO. 10-1

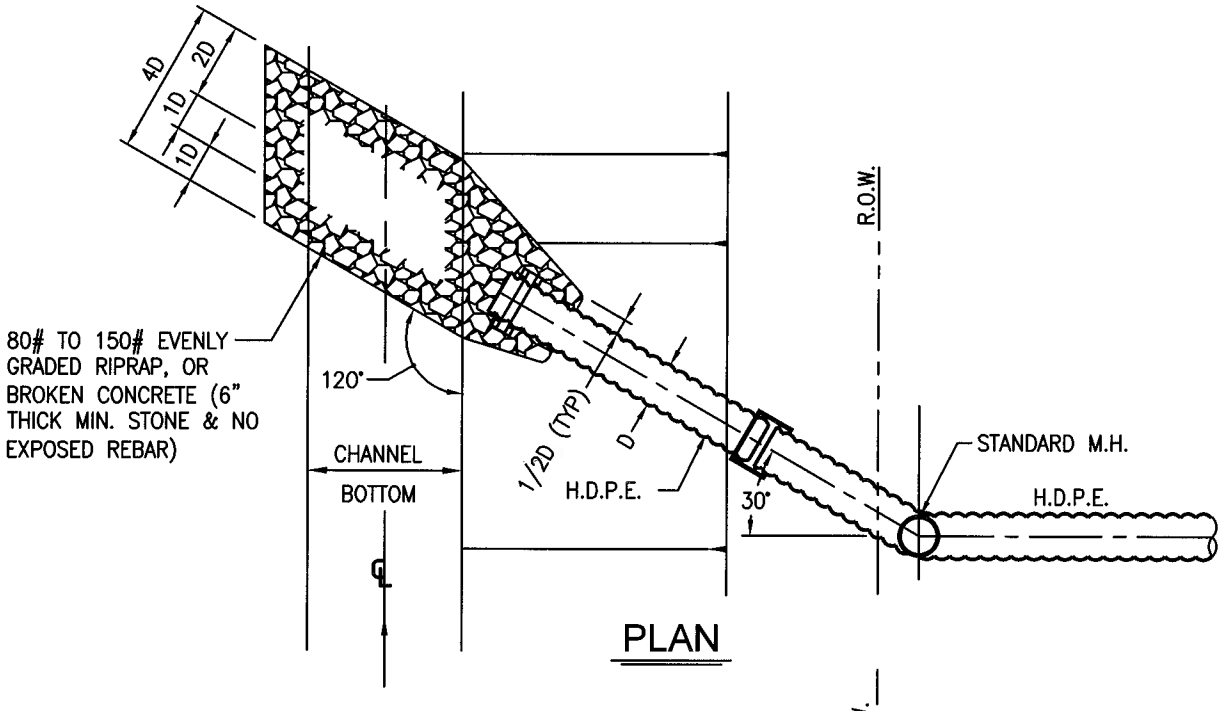

PLAN

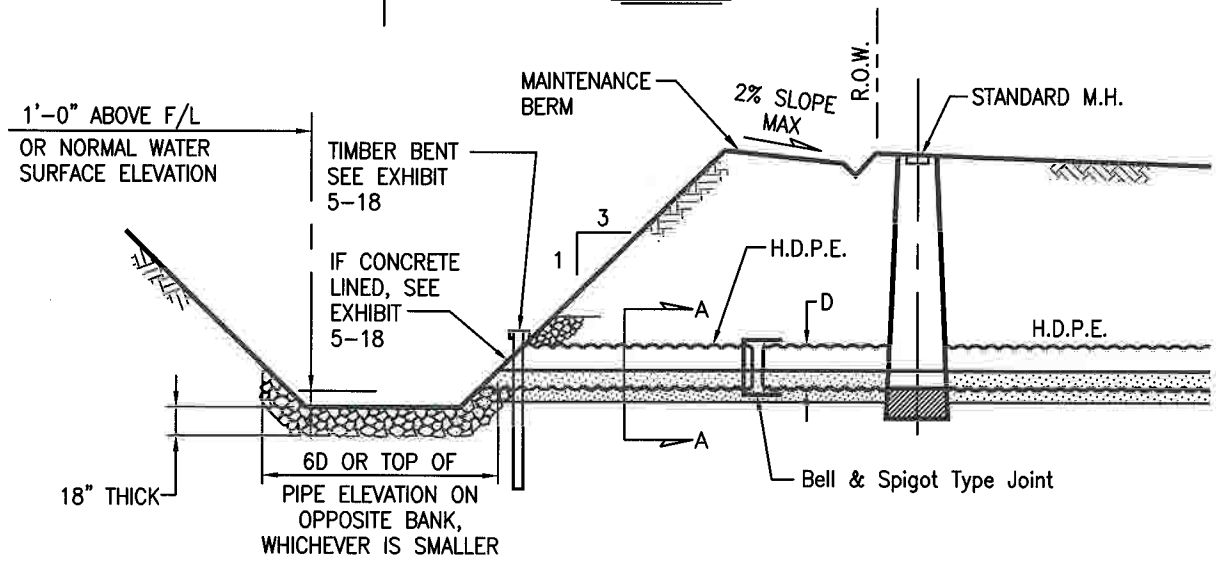

ELEVATION

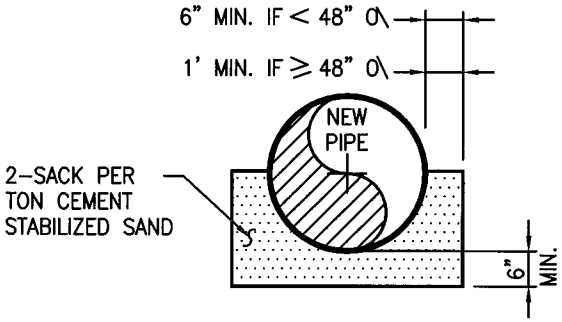

SECTION A-A

CITY OF LUFKIN
LUFKIN, TEXAS

DESIGN CRITERIA MANUAL

TYPICAL STORM SEWER OUTFALL STRUCTURE (48-inch AND LARGER)

DATE	MARCH 1997	EXHIBIT NO.	10-2

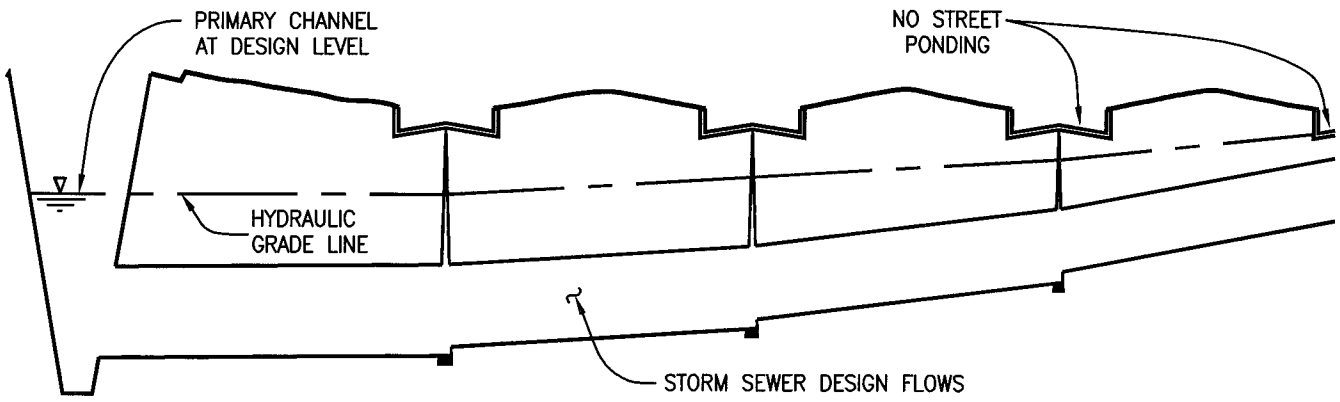

A) STANDARD STORM SEWER DESIGN CONDITION.

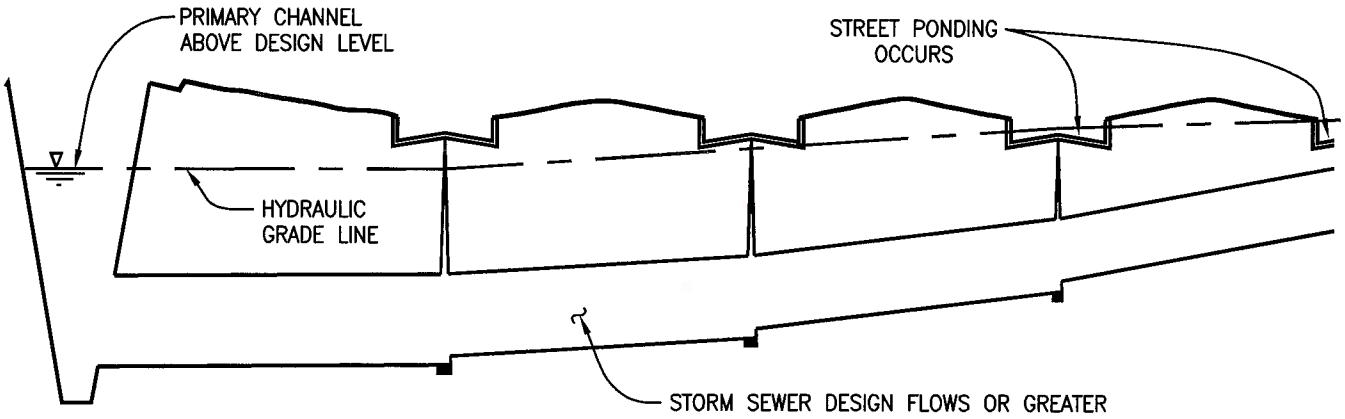

B) STREET PONDING DUE TO TAILWATER HIGHER THAN DESIGN LEVEL
OR RAINFALL IN EXCESS OF DESIGN EVENT IN STORM SEWER.

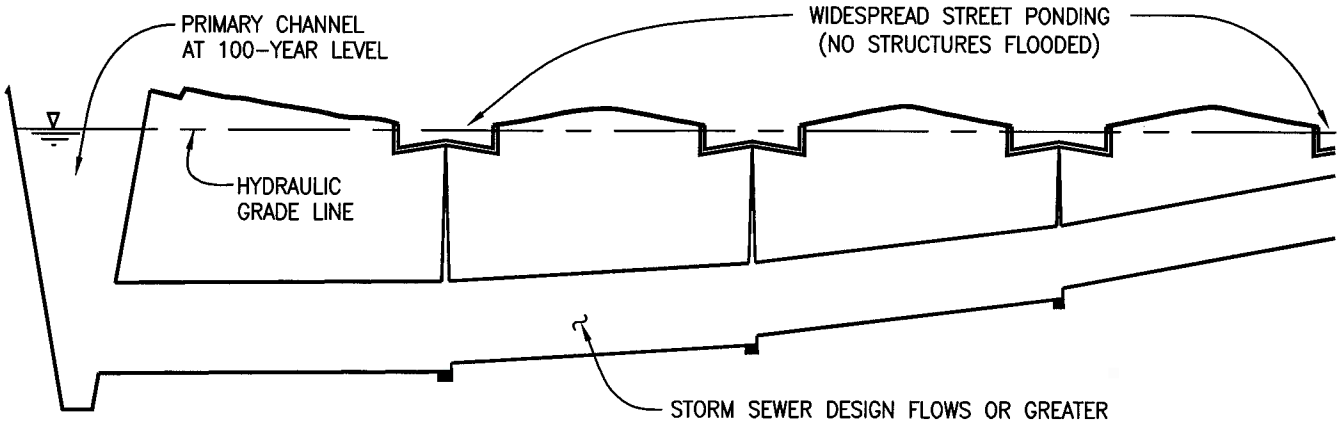

C) DRAINAGE SYSTEM OPERATING AT MAXIMUM CAPACITY.

CITY OF LUFKIN, LUFKIN, TEXAS — DESIGN CRITERIA MANUAL	STORM SEWER AND CHANNEL INTERACTION	
	DATE MARCH 1997	EXHIBIT NO. 10-3

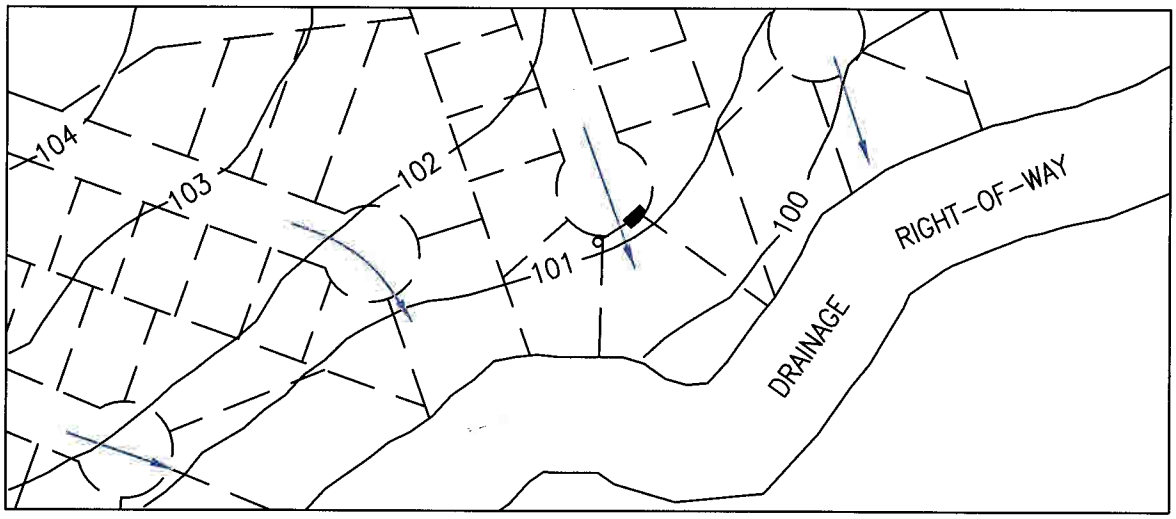

A

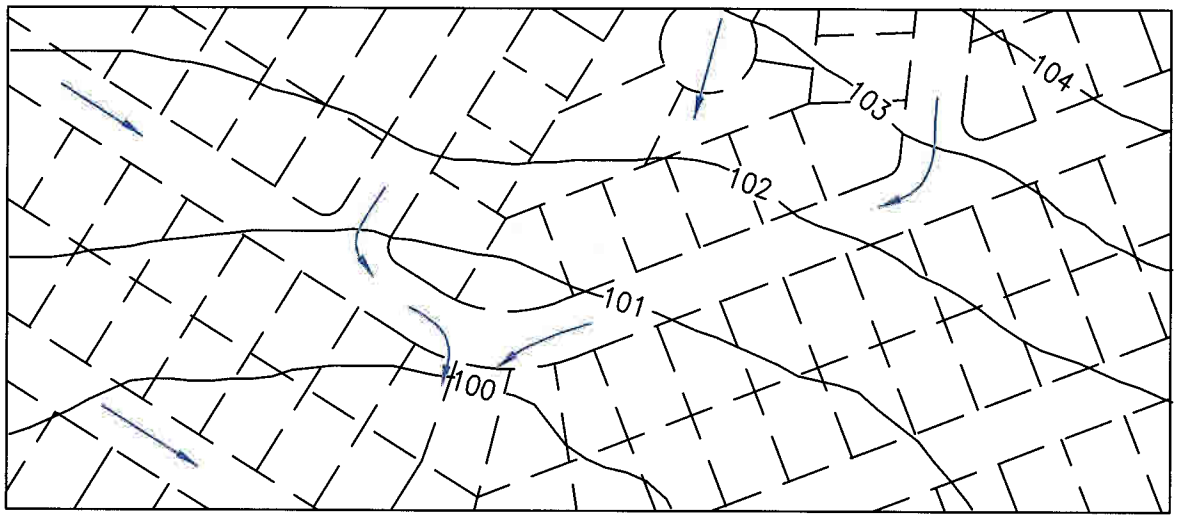

B

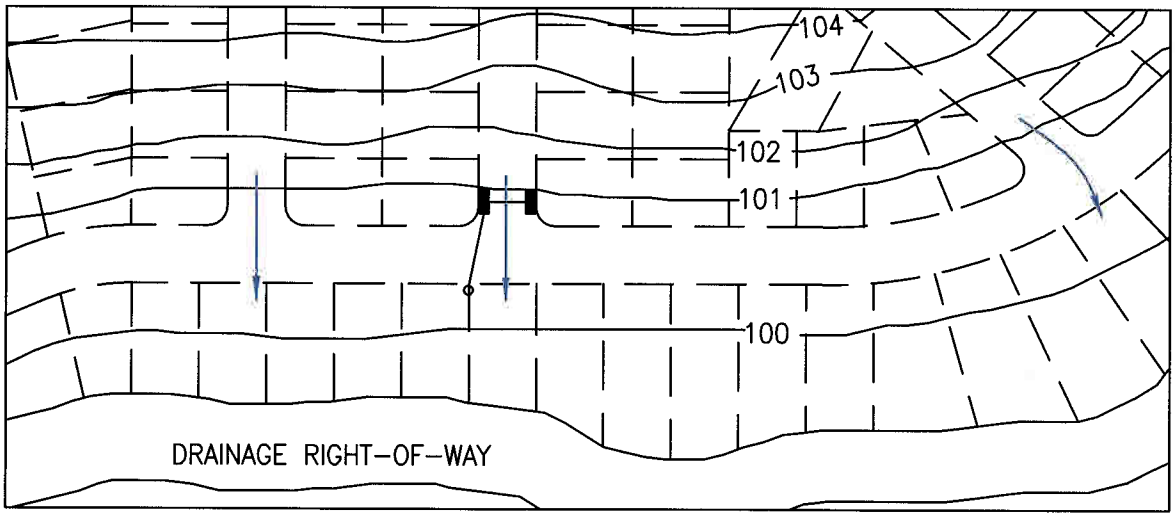

C

CITY OF LUFKIN
LUFKIN, TEXAS

DESIGN CRITERIA MANUAL

UNDESIRABLE SHEET FLOW PATTERNS

DATE	MARCH 1997	EXHIBIT NO.	10-4

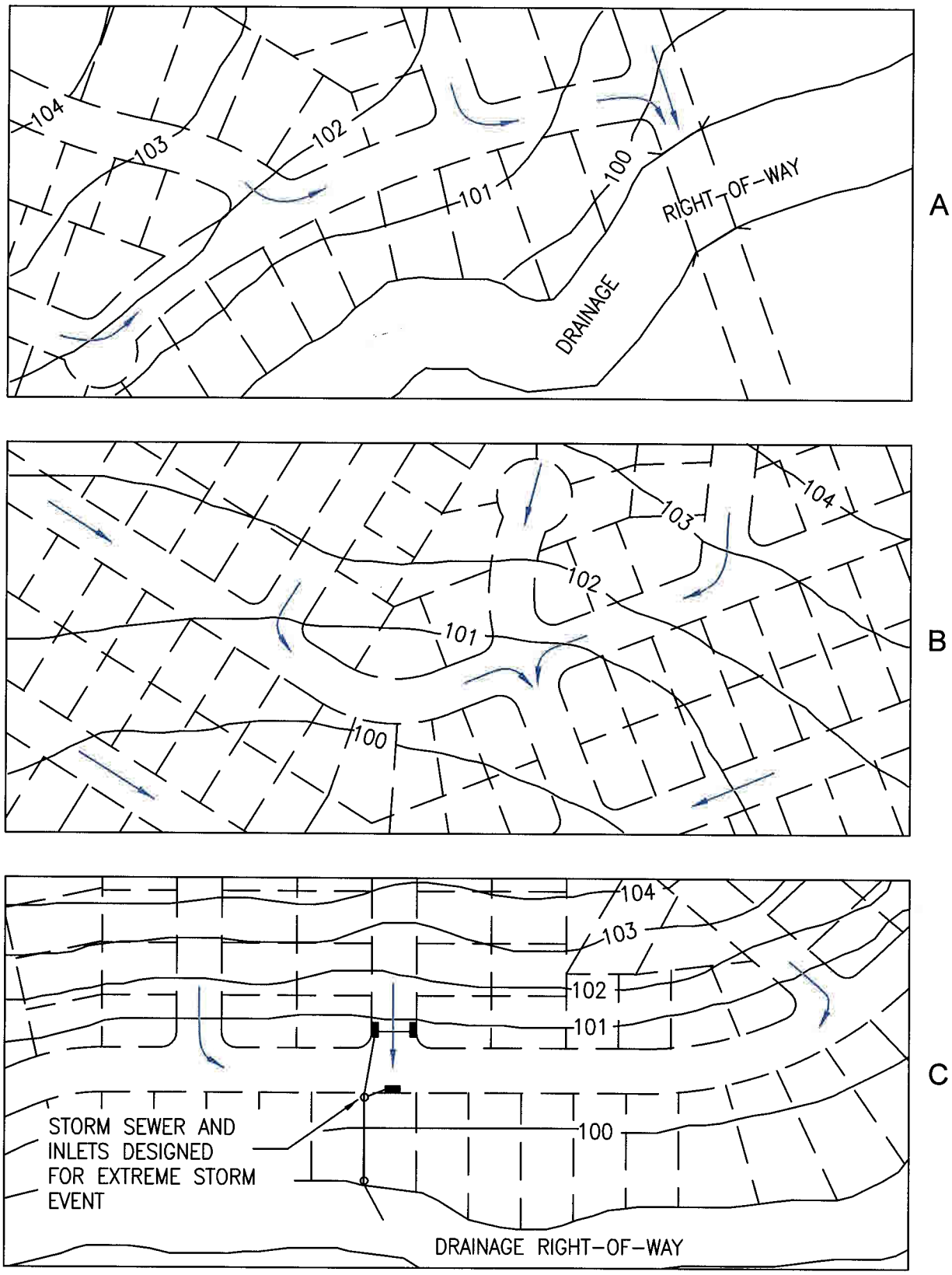

CITY OF LUFKIN
LUFKIN, TEXAS

DESIGN CRITERIA MANUAL

ACCEPTABLE SHEET FLOW PATTERNS

DATE	MARCH 1997	EXHIBIT NO.	10-5

11. EROSION AND SEDIMENT CONTROL

11.1 INTRODUCTION

This section of the manual describes methods for controlling erosion and sediment deposition in drainage facilities in the City of Lufkin.

11.2 EFFECTS OF EROSION AND SEDIMENTATION

Erosion and sedimentation can have very serious effects on storm water drainage. Some of these effects are summarized in the following paragraphs.

- **Integrity of Drainage Facilities:** Erosion can cause slope failures, increase roughness coefficients, and generally reduce the efficiency of drainage channels. Sediment deposition, on the other hand, can clog drainage culverts and reduce the available conveyance in open channels.
- **Maintenance:** Erosion can significantly reduce the maintainability of drainage facilities and increase the cost of maintenance by increasing the frequency with which repairs are required.
- **Water Quality:** Erosion and sedimentation can increase the turbidity of water and may create other water quality problems associated with pollutants attached to soil particles.

11.3 AREAS WITH HIGH EROSION POTENTIAL

Areas with relatively high erosion potential include the following:

- In channel bends, especially where the radius of curvature is less than three times the top width of flow in the channel.
- Around bridges and culverts, where channel transitions and reduced flow areas create increased flow velocities.
- In steep sections of channels and ditches and on steep, unprotected slopes where flow velocities may reach erosive levels.
- Along grass-lined channel side slopes where significant amounts of storm runoff pass over the channel bank and run down the sides of the channel.
- At confluence's where flows in tributary channels, storm sewers, or roadside ditches enter a receiving channel.
- In areas where non-cohesive soils are particularly prone to erosion.

11.4 SLOPE PROTECTION METHODS

The following paragraphs describe some of the most common slope protection methods.

11.4.1 Turf Establishment

The establishment of grasses on exposed earthen side slopes is the most common method for protecting the slopes from erosion. Grass establishment should be initiated as quickly as possible after channel construction or repair work is completed. The grasses used for this purpose should be hardy varieties which do not require repeated watering and excessive amounts of care once they are established. Grasses with deep root systems are preferable to those with shallower systems because they are more resistant to drought.

11.4.2 Slope Paving

Concrete slope paving is an effective slope protection method, but is frequently too costly to apply over large areas. Therefore, slope paving is most commonly used in limited areas where the potential for erosion is very high. Table 11-1 provides a summary of slope paving requirements for varying channel side slopes.

TABLE 11-1: MINIMUM CONCRETE THICKNESS AND REINFORCEMENT		
Channel Side Slope (H:V)	Minimum Concrete Thickness	Minimum Reinforcement
3:1	4 inches	6 x 6 x W2.9 x W2.9 welded wire fabric
2:1	5 inches	6 x 6 x W4.0 x W4.0 welded wire fabric
1.5:1	6 inches	4 x 4 x W4.0 x W4.0 reinforcement

Minimum requirements for concrete slope paving are as follows.

- All concrete slope paving shall consist of Class A concrete.
- Concrete slope paving shall be established at slopes no steeper than 1.5 horizontal to 1 vertical.
- All slope paving shall include a minimum 18-inch toe wall at the top and sides and a 24-inch toe wall across or along the channel bottom for clay soils. For sandy soils, a 36-inch toe wall is required across the channel bottom.
- Weep holes shall be used to relieve hydrostatic pressure behind concrete slope paving. The specific type, size, and placement of the weep holes shall be based on the recommendations of a geotechnical report.
- Where construction is to take place under muddy conditions or where standing water is present, a seal slab of Class C concrete shall be placed prior to placement of the concrete slope paving.
- Control joints shall be provided at a maximum spacing of approximately 25 feet. A sealing agent shall be utilized to prevent moisture infiltration at control joints.

11.4.3 Rip-Rap

Rip-rap consists of rock or broken concrete in pieces with a minimum dimension of about 6 inches and a maximum dimension of 18 to 24 inches. Rip-rap is normally hand-placed as a layer which extends 18 inches below the finished channel grade. Minimum requirements for rip-rap are as follows.

- The minimum mat thickness shall be 18 inches.
- Well-graded blocks weighing from 40 pounds to 265 pounds shall be used.
- The maximum steepness of slopes protected by rip-rap shall be 2 horizontal to 1 vertical.
- Filter fabric bedding is required in areas where rip-rap is placed on sandy or silty soils. On cohesive clay soils with very little sand content (less than 20% sand), filter fabric is not required.

Sacks of ready-mix concrete may not be used as rip-rap because the lack of gradation allows water penetration and undermining of the soil under the installation.

11.4.4 Acceptable Velocities for Various Slope Treatments

Table 11-2 provides a summary of allowable flow velocities for open channels. In the table, the maximum allowable flow velocity is related to the type of channel, the slope treatment, and the soil structure.

TABLE 11-2: PERMISSIBLE NON-EROSIVE VELOCITIES IN OPEN CHANNELS

Soil Description	Slope Treatment	Maximum Velocity (fps)
Fine Sand	None	1.50
Sandy Loam	None	1.75
Silt Loam	None	2.00
Clay Loam	None	2.50
Stiff Clay	None	3.75
Sandy Soils (Easily Eroded)	Grass	4
Clay Soils (Erosion-Resistant)	Grass	5
Sandy Soils (Easily Eroded)	Rip-Rap	6
Clay Soils (Erosion Resistant)	Rip-Rap	8
Sandy Soils (Easily Eroded)	Concrete	8
Clay Soils (Erosion Resistant)	Concrete	10

11.5 REQUIREMENTS FOR CHANNEL BENDS AND CONFLUENCES

Erosion protection is required for all channel bends with a radius of curvature (measured along the channel centerline) less than three times the top width of flow in the channel. When required, erosion protection must extend along the outside bank of the bend and at least 20 feet upstream and downstream of the tangent points. Slope protection on the channel bottom and the inside bank is required only if anticipated flow velocities are above non-erosive levels. Exhibit 11-1 illustrates the erosion protection requirements for channel bends.

Exhibit 11-2 illustrates the minimum requirements for erosion protection and channel lining at the confluence of two open channels. Table 11-3 may be used to determine whether erosion protection is needed given the angle of intersection between the channels and the anticipated 25-year flow velocity in the tributary channel. Table 11-4 summarizes the minimum extent of erosion protection upstream and downstream of the confluence.

TABLE 11-3: MINIMUM EROSION PROTECTION FOR CHANNEL CONFLUENCES		
25-Year Velocity in Tributary Channel (fps)	Angle of Intersection (θ)	
	15 to 45 degrees	45 to 90 degrees
4 or more	Protection Required	Protection Required
2 to 4	No Protection Required	Protection Required
2 or less	No Protection Required	No Protection Required

TABLE 11-4: MINIMUM EXTENT OF EROSION PROTECTION AT CONFLUENCES	
Location	Minimum Distance
a	20 feet
b	larger of 50 feet or $0.75T_m/\tan\theta$
c	20 feet

For both bends and confluence's, the top edge of erosion protection shall extend at least as high as the 25-year design water level in the channel or two-thirds of the way up the channel side slopes, whichever is lower. A healthy grass cover must be established on the channel slope above the concrete lining.

11.6 REQUIREMENTS FOR STORM SEWER OUTFALLS

Storm sewer outfalls shall be designed and constructed in accordance with Exhibits 11-3 and 11-4.

11.7 CHANNEL BACKSLOPE DRAIN SYSTEMS

Backslope drain systems intercept sheet flow which otherwise would flow over the banks of drainage channels and down the side slopes. The purpose of backslope drain systems is to prevent the erosion which would accompany these overflows. The following minimum requirements shall be applied to all backslope drainage systems.

- The minimum backslope drain pipe diameter shall be 24 inches.
- The maximum spacing between backslope drains shall be 600 feet.
- The center-line of the backslope drainage swale shall be located five feet inside the channel right-of-way line when 20-foot maintenance berms are used. When a 30-foot maintenance berm width is used, the backslope drainage swale shall be located 7.5 feet inside the right-of-way line.

- The minimum depth for backslope drainage swales shall be 0.5 feet. The maximum depth shall be 2.0 feet.
- The minimum invert slope for backslope drainage swales shall be 0.2%.
- The maximum side slope for backslope drainage swales shall be 1.5 horizontal to 1 vertical (1.5:1).

11.8 INTERCEPTOR STRUCTURES FOR SECONDARY DRAINAGE

Interceptor structures are designed to convey storm water from secondary drainage facilities such as roadside ditches into receiving channels. The main purpose of the interceptor is to prevent storm runoff from flowing over the channel banks and down the side slopes. Exhibits 11-5 and 11-6 illustrate the basic configuration of a typical interceptor structure.

11.9 STORM WATER POLLUTION PREVENTION PLANS

Storm water pollution prevention plans shall be developed for all projects involving drainage improvements. These plans should focus primarily on the prevention of erosion and sediment deposition. Pollution control plans should be simple, easy to implement, and easy to maintain through the life of the construction project. Exhibit 11-7 illustrates the configuration for a rock berm, which is one of the most effective measures for preventing sediments from being carried into a creek or channel. The rock berm reduces flow velocities in small ditches, causing suspended sediments to settle out. Sediments accumulating in the area immediately upstream of the rock berm must be removed periodically in order to preserve the effectiveness of the berm and the hydraulic capacity of the ditch. Exhibit 11-8 illustrates the proper method for installing filter fabric fence, another effective measure for containing sediments.

11.10 SPECIAL ENERGY DISSIPATION STRUCTURES

Special energy dissipation structures, such as baffled chute spillways, shall be designed in accordance with procedures developed by the U.S. Bureau of Reclamation and set forth in *Design of Small Dams* (U.S. Department of the Interior, Bureau of Reclamation, 1977).

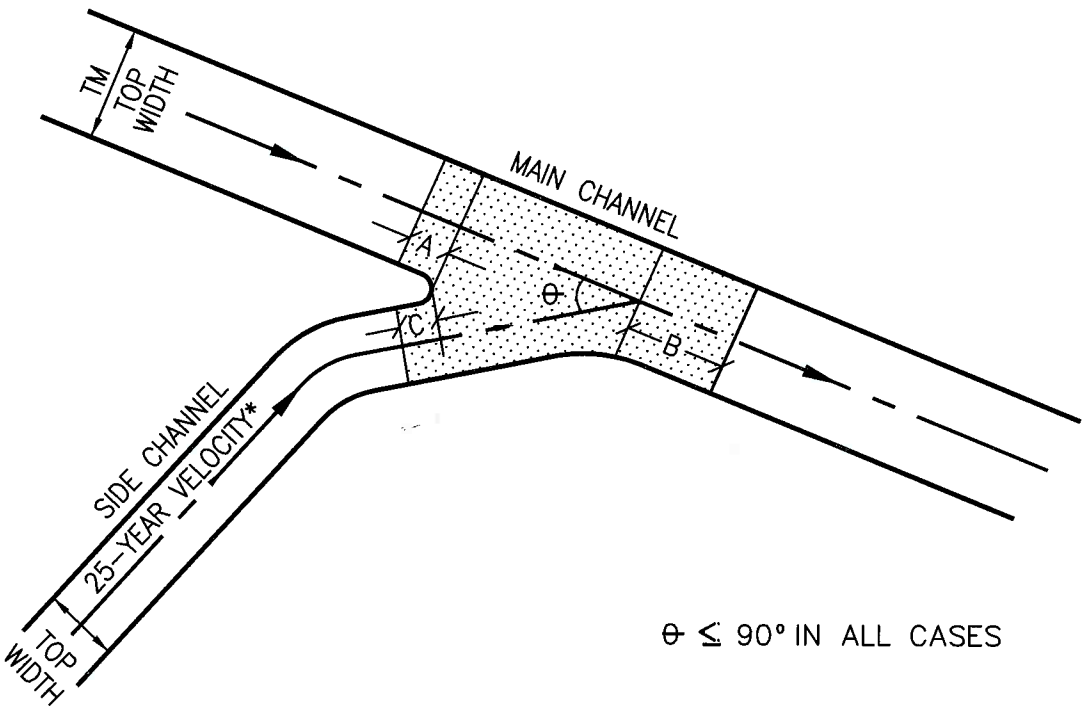

θ ≤ 90° IN ALL CASES

MINIMUM EXTENT OF EROSION PROTECTION

LOCATION	DISTANCE (FT.)
A	20'
B	LARGER OF 50' OR 0.75 X TM I TAN θ
C	20'

25-YEAR VELOCITY* IN SIDE CHANNEL (FEET PER SECOND)	ANGLE OF INTERSECTION, θ	
	15° – 45°	45° – 90°
4 OR MORE	PROTECTION	PROTECTION
2 – 4	NO PROTECTION	PROTECTION
2 OR LESS	NO PROTECTION	NO PROTECTION

* NOTE:

25-YEAR VELOCITY IN SIDE CHANNEL ASSUMING NO BACKWATER FROM MAIN CHANNEL.

CITY OF LUFKIN
LUFKIN, TEXAS

DESIGN CRITERIA MANUAL

SLOPE PROTECTION REQUIREMENTS AT STREAM CONFLUENCES

DATE MARCH 1997

EXHIBIT NO. 11-1

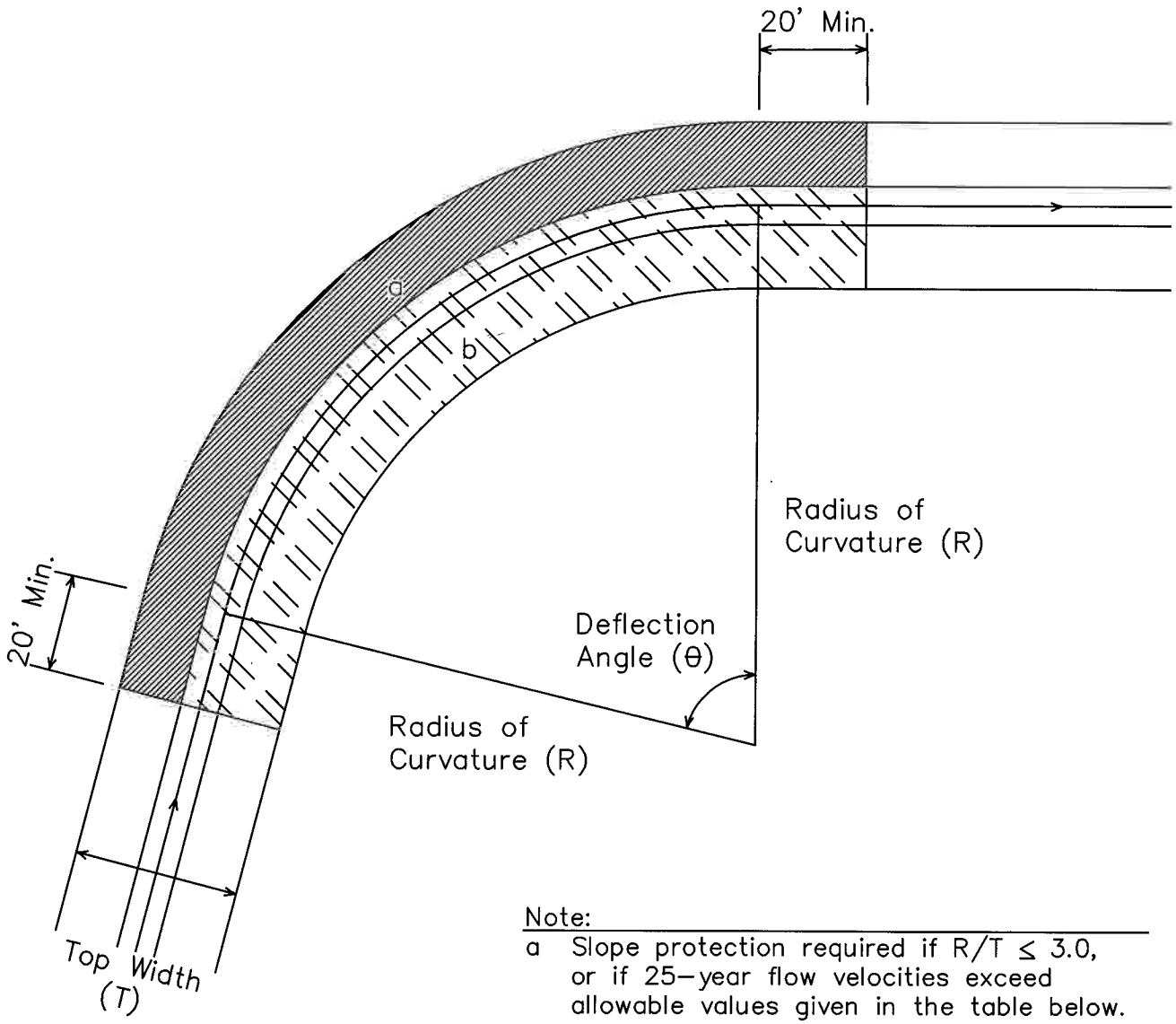

Note:

a Slope protection required if $R/T \leq 3.0$, or if 25–year flow velocities exceed allowable values given in the table below.

b Slope protection required if 25–year flow velocities exceed allowable values given in the table below.

Allowable 25–Year Velocities for Channel Design

Channel Description	Average Velocity (Feet Per Second)	Maximum Velocity (Feet Per Second)
Grass Lined: Predominantly Clay Soil	3.0	5.0
Grass Lined: Predominantly Sand Soil	2.0	4.0
Rip–rap Lined	5.0	8.0
Concrete Lined	6.0	10.0

Source: (HCFCD, 1984)

CITY OF LUFKIN, LUFKIN, TEXAS

DESIGN CRITERIA MANUAL

SLOPE PROTECTION REQUIREMENTS AT CHANNEL BENDS

DATE MARCH 1997

EXHIBIT NO. 11-2

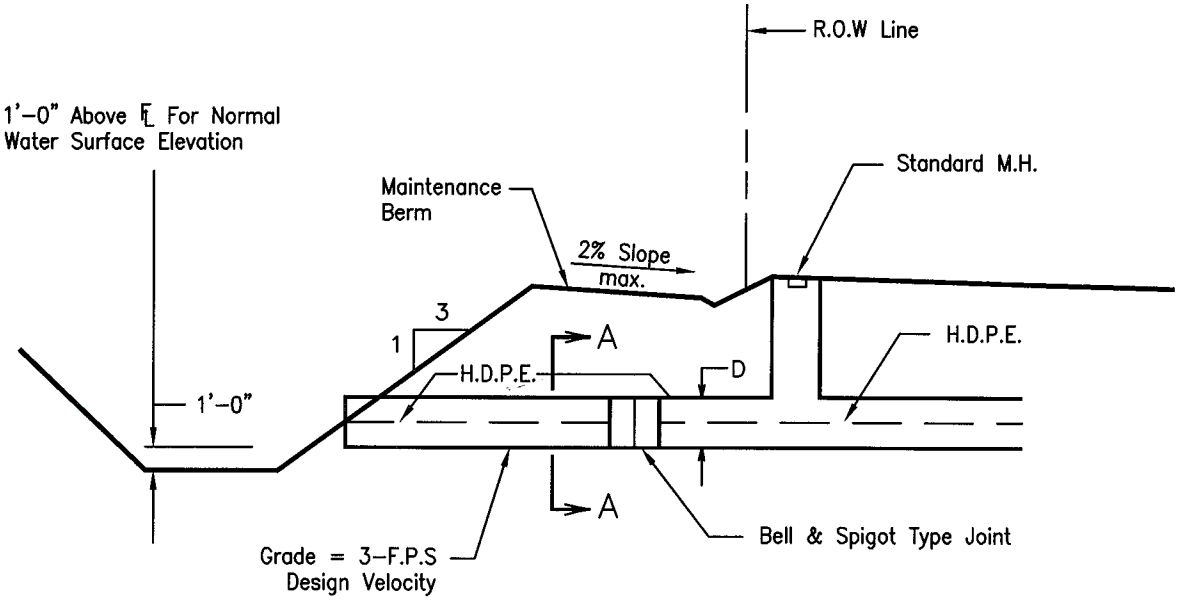

ELEVATION

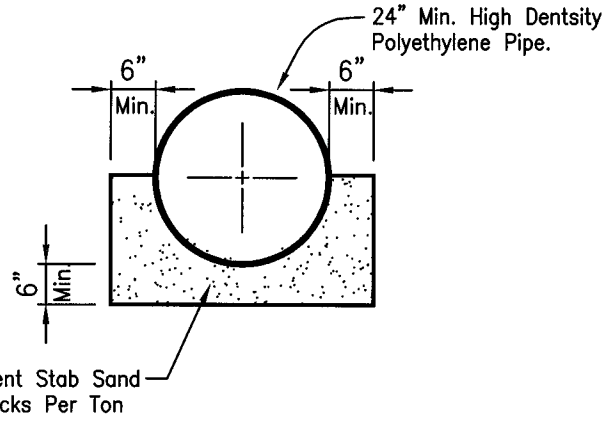

SECTION A–A

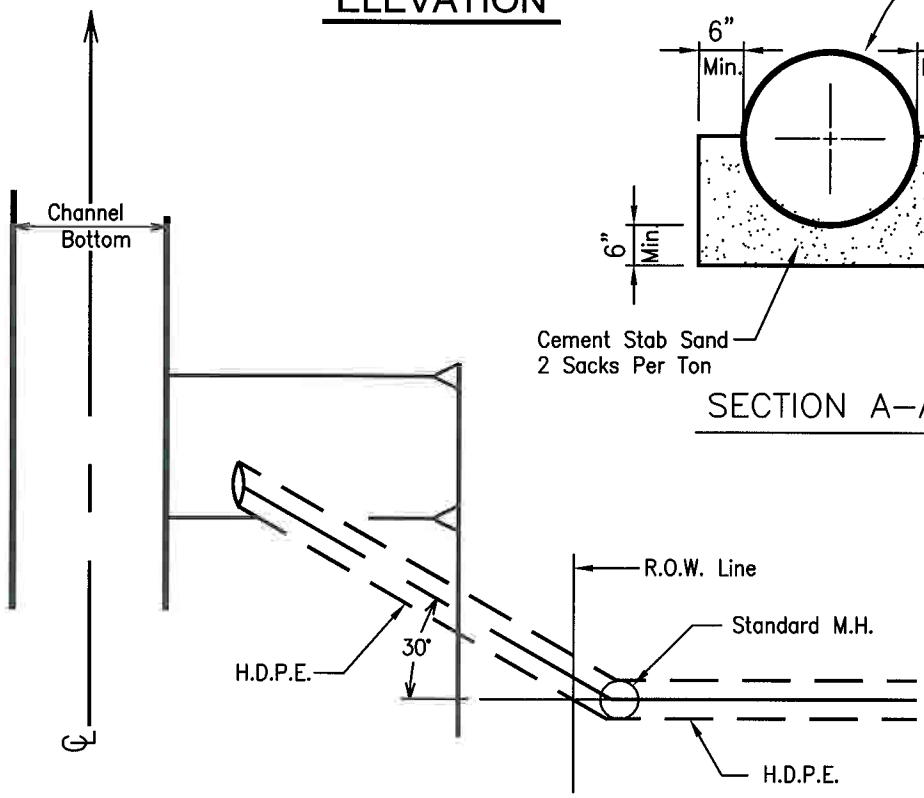

PLAN

CITY OF LUFKIN, LUFKIN, TEXAS — DESIGN CRITERIA MANUAL	TYPICAL STORM SEWER OUTFALL STRUCTURE (24–inch to 42–inch)	
	DATE MARCH 1997	EXHIBIT NO. 11-3

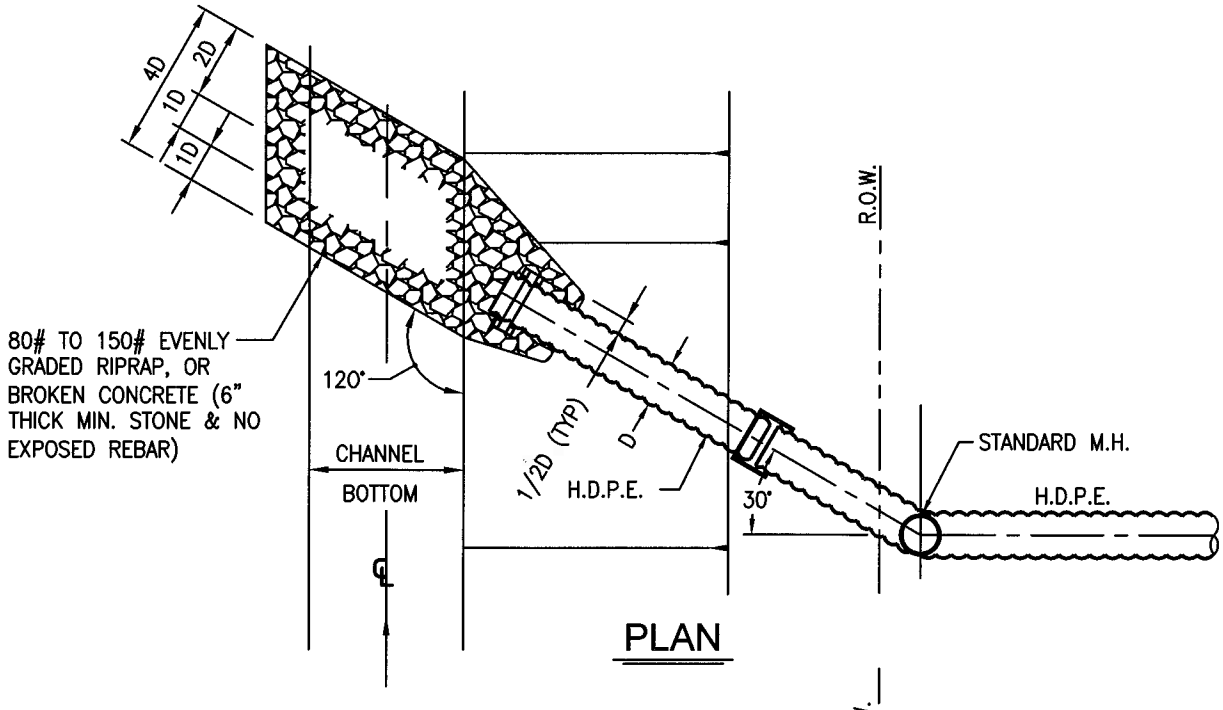

PLAN

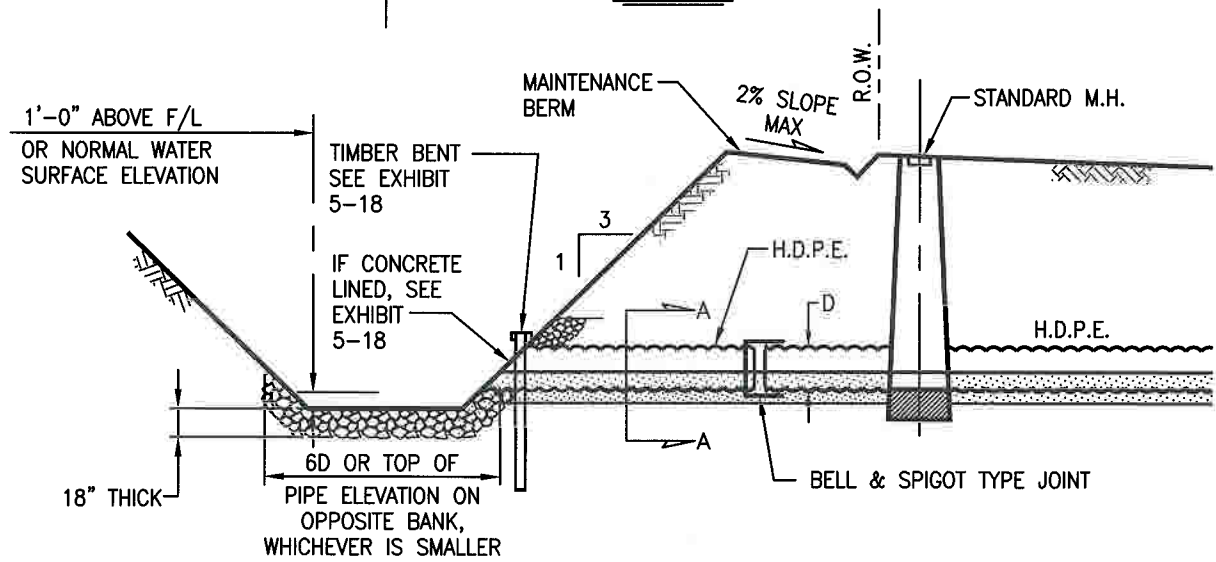

ELEVATION

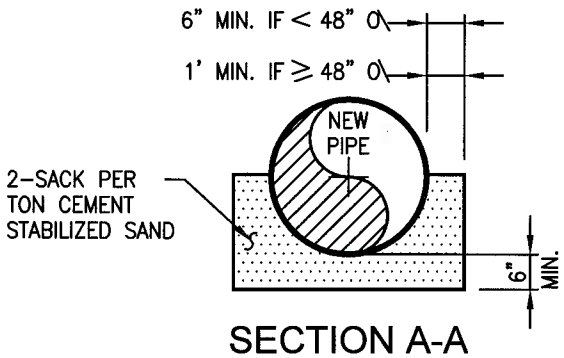

SECTION A-A

CITY OF LUFKIN, LUFKIN, TEXAS	DESIGN CRITERIA MANUAL	TYPICAL STORM SEWER STRUCTURE (48-inch AND LARGER)	
		DATE MARCH 1997	EXHIBIT NO. 11-4

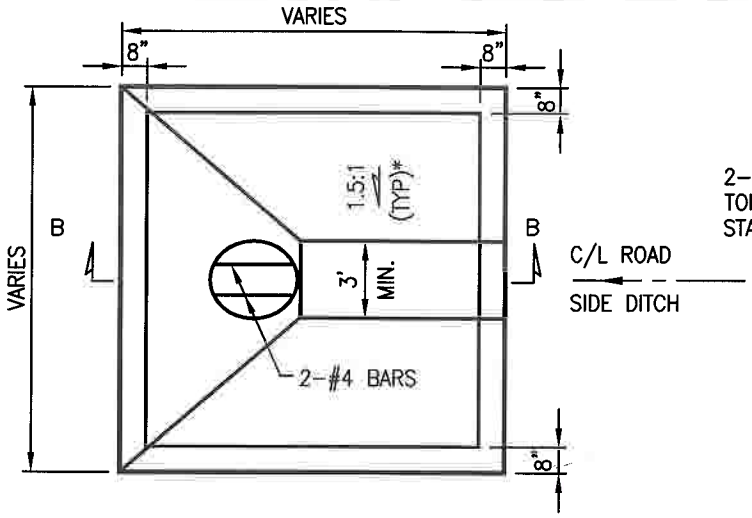

PLAN

* OR MATCH ROADSIDE DITCH SLOPE

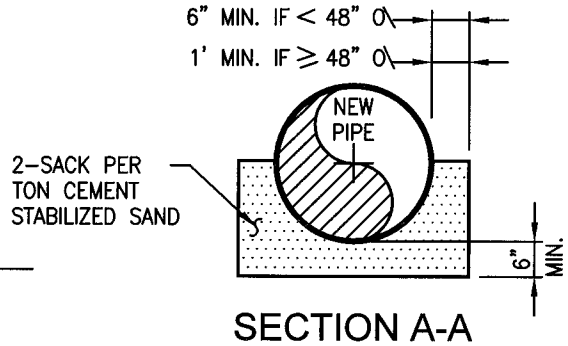

SECTION A-A

H.D.P.E. SLOPE TABLE

PIPE DIAMETER	MIN. SLOPE
24 IN.	0.6%
30 IN.	0.4%
36 IN.	0.3%
42 IN.	0.3%
≥ 48 IN.	0.2%

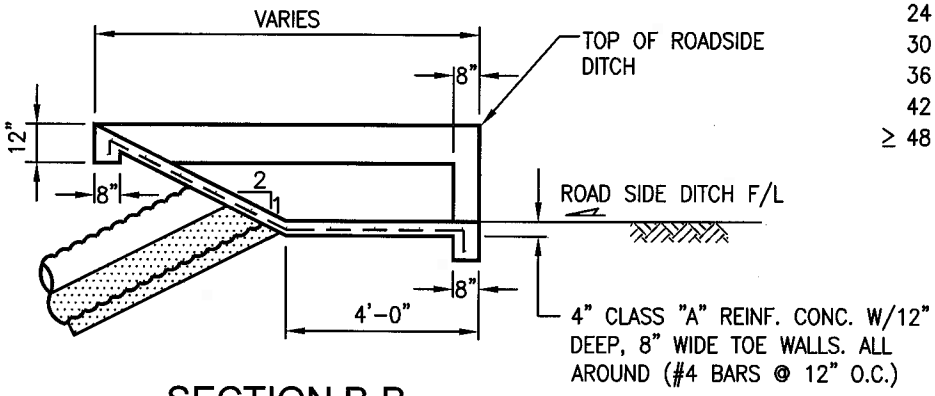

SECTION B-B

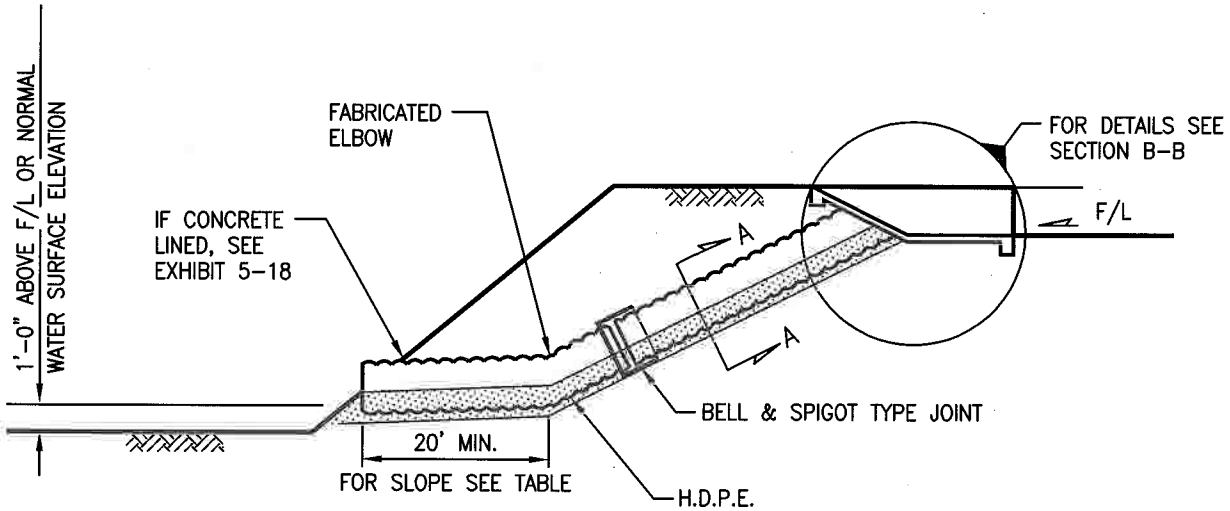

PROFILE

CITY OF LUFKIN
LUFKIN, TEXAS

DESIGN CRITERIA MANUAL

TYPICAL ROADSIDE DITCH INTERCEPTOR STRUCTURE

DATE	MARCH 1997	EXHIBIT NO.	11-5

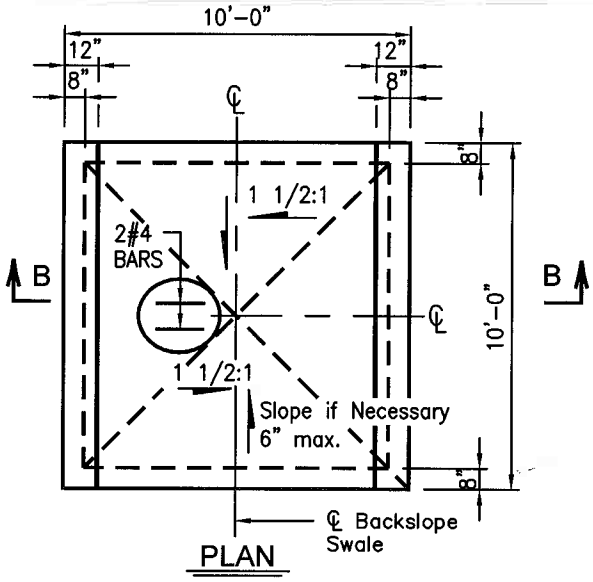

PLAN

PIPE DIA.	SLOPE
24 in.	0.6%
36 in.	0.3%
48 in.	0.2%
60 in.	0.2%

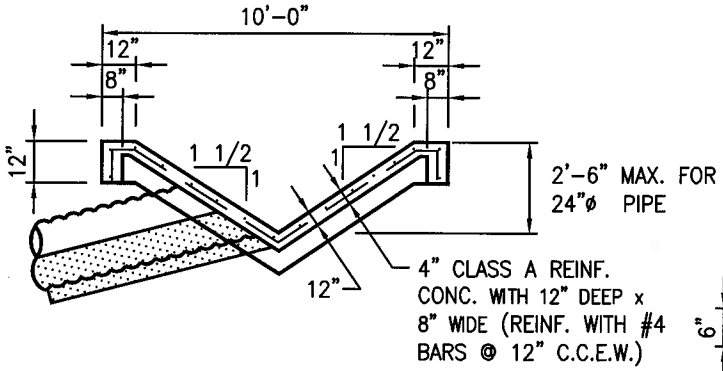

SECTION B-B

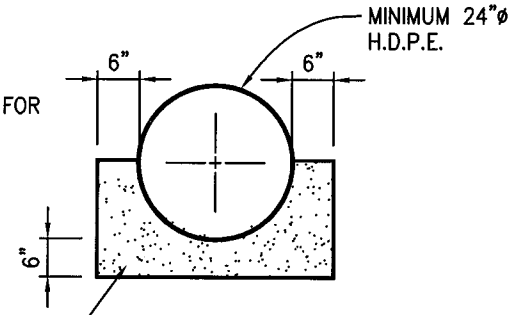

CEMENT STABILIZED
SAND – 2 SACKS
PER TON

SECTION A-A

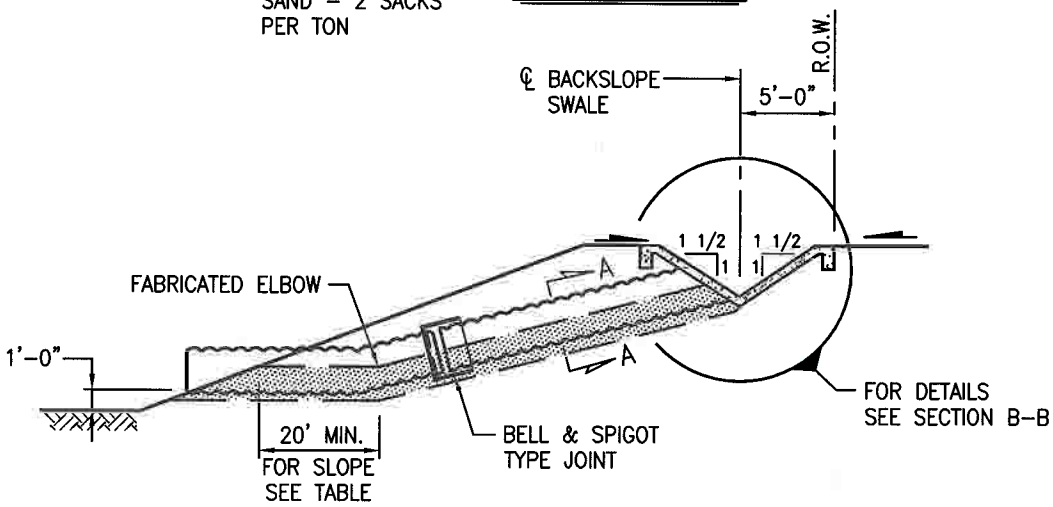

ELEVATION

CITY OF LUFKIN, LUFKIN, TEXAS	DESIGN CRITERIA MANUAL	TYPICAL BACKSLOPE INTERCEPTOR STRUCTURE	
		DATE MARCH 1997	EXHIBIT NO. 11-6

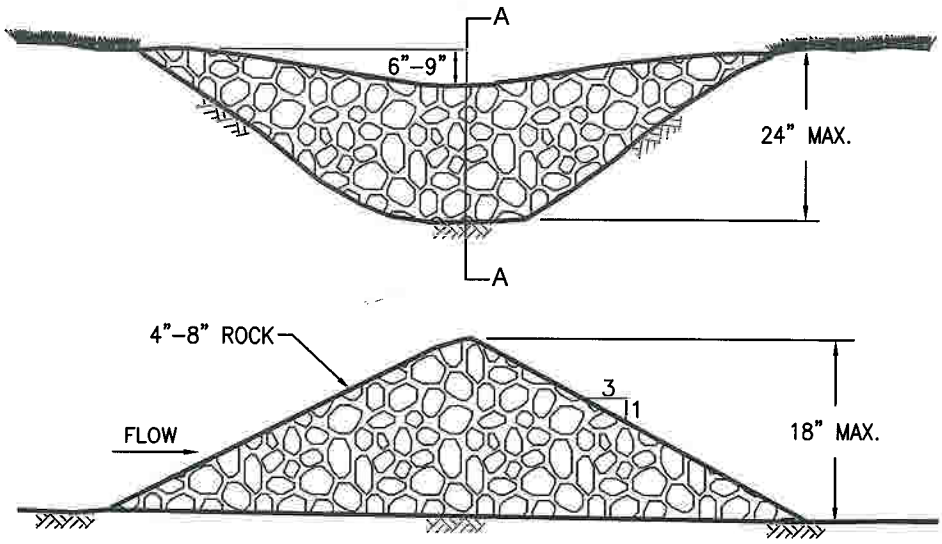

CROSS-SECTION "A"

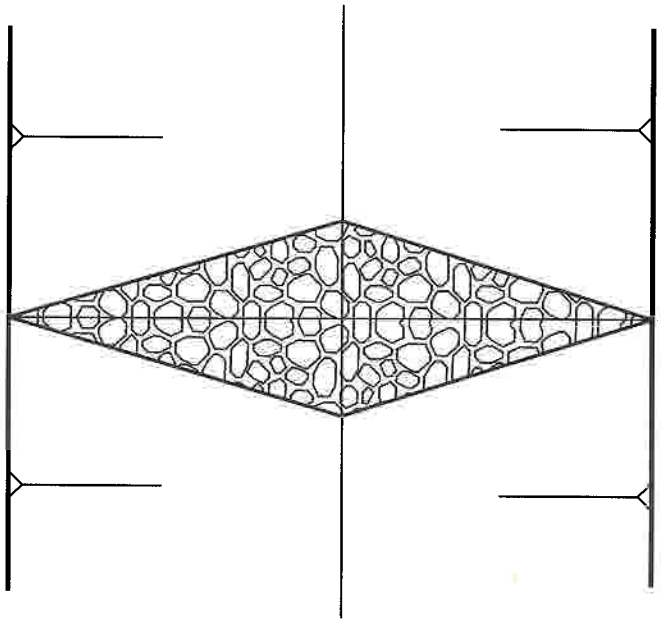

PLAN VIEW

CITY OF LUFKIN
LUFKIN, TEXAS

DESIGN CRITERIA MANUAL

TYPICAL ROCK BERM INSTALLATION

DATE	MARCH 1997	EXHIBIT NO.	11-7

FILTER FABRIC FENCE

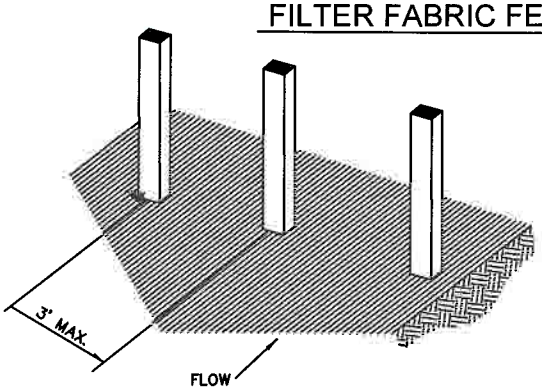

1. SET POST AT REQUIRED SPACING

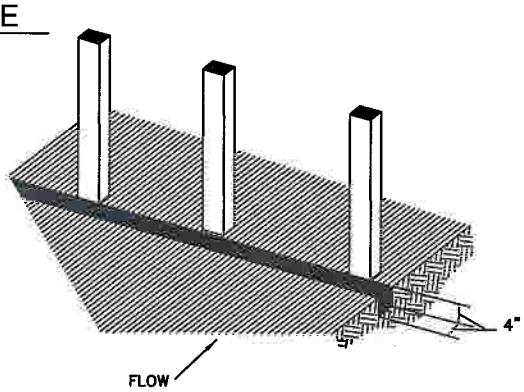

2. EXCAVATE A 4"x4" TRENCH UPSLOPE ALONG THE LINE OF STAKES

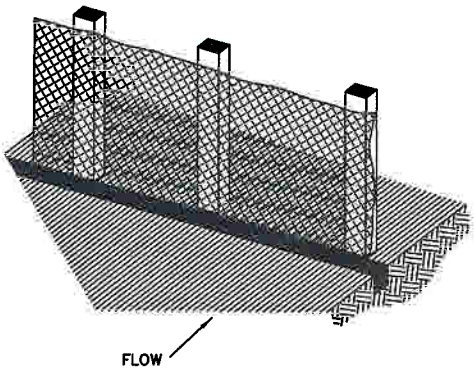

3. STAKE FILTER MATERIAL TO STAKES AND EXTEND IT INTO THE TRENCH.

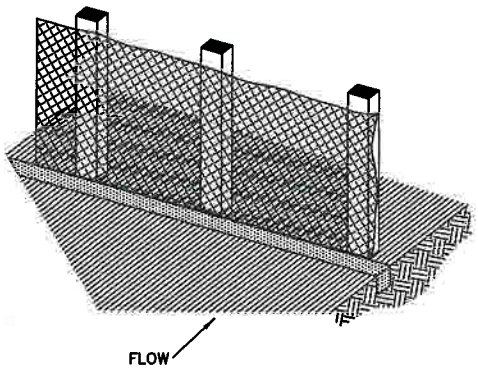

4. BACKFILL AND COMPACT THE EXCAVATED SOIL.

EXTENSION OF FABRIC INTO TRENCH

EXTENSION OF FABRIC INTO TRENCH.

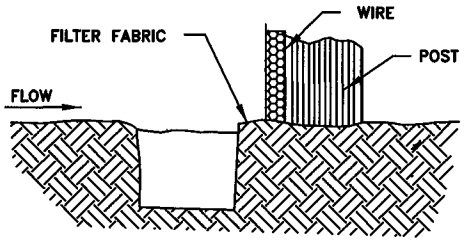

SECTION A-A

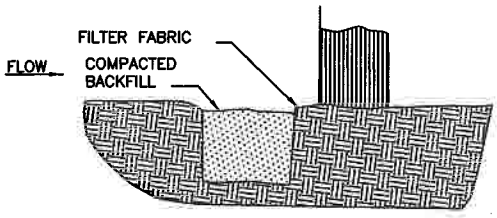

SECTION A-A

ALTERNATIVE V–TRENCH EXTENSION OF FABRIC INTO TRENCH

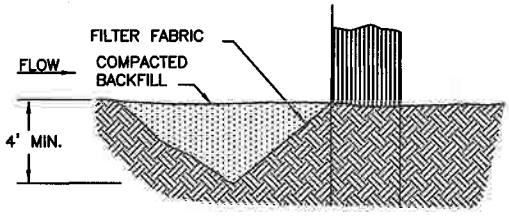

SECTION A-A

CITY OF LUFKIN
LUFKIN, TEXAS

DESIGN CRITERIA MANUAL

TYPICAL FILTER FABRIC FENCE INSTALLATION

DATE	MARCH 1997	EXHIBIT NO.	11-8